GEORGETOWN NEIGHBORHOOD LIBRARY

3260 R STREET, NW

WASHINGTON, DC

Client

District of Columbia Public Library
901 G Street, NW
Washington, DC 20001-4599
202.442.6870

Construction Manager

Smoot Construction Company
5335 Wisconsin Avenue, NW
Suite 940
Washington, DC 20007
202.243.6688

Architect

Martinez + Johnson Architecture
1412 Eye Street, NW
Washington, DC 20005
202.333.4480

Associate Architect

Hoshide Williams Architects
121 East Boston
Seattle, WA 98102
206.325.6441

Landscape Architect

Lee + Papa Associates
638 Eye Street, NW
Washington, DC 20001
202.466.6666

Architectural Historian

EHT Traceries
1121 Fifth Street, NW
Washington, DC 20001
202.393.1199

Civil Engineer

AMT
10 G Street, NW,
Suite 400
Washington, DC 20002
202.289.4545

Structural Engineer

ReStl Designers
1001 Connecticut Avenue, NW
Suite 320
Washington, DC 20036
202.452.1103

MEP Engineer

John J. Christie & Associates
8380 Colesville Road
Suite 400
Silver Spring, MD 20910
301.608.0005

Life Safety / Code Consultant

Rolf Jensen & Associates
14502 Greenview Drive
Suite 500
Laurel, MD 20708
301.490.3901

Lighting Consultant

MCLA
1623 Wisconsin Avenue, NW
Third Floor
Washington, DC 20007
202.298.8062

LEED Certification

GreenShape
1001 Connecticut Avenue, NW
Suite 704
Washington, DC 20036
202.298.8062

Acoustics and Technology Consulting

Polysonics
5115 MacArthur Blvd, NW
Washington, DC 20016
202.244.7171

PERMIT SET

STEEL PACKAGE

26th JANUARY 2009

ARCHITECT

MARTINEZ+JOHNSON
ARCHITECTURE

M+J Project No. 7590

© 2008 M+J

P:\7590 Georgetown Library\Drawings\CD\7590-00_STEEL_PACK_cover.dwg 1/26/2009

A. GENERAL NOTES

1. THE STRUCTURAL PLANS AND SPECIFICATIONS, TO THE BEST OF OUR KNOWLEDGE, COMPLY WITH THE APPLICABLE REQUIREMENTS OF THE BUILDING CODE OF THE DISTRICT OF COLUMBIA AND ITS SUPPLEMENTS.
2. THE CONTRACTOR SHALL COMPLY WITH THE REQUIREMENTS OF THE DISTRICT OF COLUMBIA BUILDING CODE, AND ALL APPLICABLE FEDERAL AND STATE CODES, STANDARDS, REGULATIONS, AND LAWS.
3. ALL REFERENCED STANDARDS REFER TO THE EDITION IN FORCE AT THE TIME THESE PLANS AND SPECIFICATIONS ARE ISSUED FOR PERMIT.
4. WORK NOT INDICATED ON A PART OF THE DRAWINGS BUT REASONABLY IMPLIED TO BE SIMILAR TO THAT SHOWN AT CORRESPONDING PLACES SHALL BE REPEATED.
5. IN ANY CASE OF CONFLICT BETWEEN THE NOTES, DETAILS AND SPECIFICATIONS, THE MOST RIGID REQUIREMENTS SHALL GOVERN. CONTRACTOR SHALL MAKE NO DEVIATION FROM CONTRACT DOCUMENTS WITHOUT WRITTEN APPROVAL OF THE ARCHITECT.
6. THE CONTRACTOR SHALL VERIFY ALL DIMENSIONS AND CONDITIONS AND COORDINATE WITH ARCHITECTURAL DRAWINGS, DRAWINGS FROM OTHER CONSULTANTS, PROJECT SHOP DRAWINGS AND FIELD CONDITIONS.
7. THE CONTRACTOR SHALL PROTECT EXISTING FACILITIES, STRUCTURES, AND UTILITY LINES FROM ALL DAMAGE.
8. JOB SAFETY AND CONSTRUCTION PROCEDURES ARE THE RESPONSIBILITY OF THE CONTRACTOR.
9. DO NOT SCALE THE DRAWINGS.
10. NO CHANGE IN SIZE, DIMENSIONS, POSITION OF ANY PENETRATIONS THROUGH ANY STRUCTURAL ELEMENTS IS PERMITTED WITHOUT THE WRITTEN APPROVAL OF THE ENGINEER. PROVIDE SHOP DRAWINGS FOR ALL PENETRATIONS THROUGH STRUCTURAL ELEMENTS REQUIRED BY ARCHITECTURAL, MEP OR OTHER DESIGNS.
11. LOADS: THE BUILDING IS DESIGNED FOR THE FOLLOWING UNIFORMLY DISTRIBUTED LIVE LOADS:

OFFICES	100 LBS./SQ. FT.
ALL OTHER LOBBIES & CORRIDORS	100 LBS./SQ. FT.
TERRACE	100 LBS./SQ. FT.
PEABODY ROOM	100 LBS./SQ. FT.
MECHANICAL FLOORS	150 LBS/SQ. FT. OR ACTUAL WEIGHT
ROOFS	30 LBS./SQ. FT

B. SEISMIC LOADS

1. SEISMIC PARAMETERS USED IN DESIGN ARE AS FOLLOWS:

A. MAPPED SPECTRAL ACCELERATION AT 1–SEC PERIOD	S_1 = 0.050g
B. MAPPED SPECTRAL ACCELERATION AT SHORT PERIODS	Ss = 0.154g
C. SEISMIC USE GROUP	II
D. SEISMIC DESIGN CATEGORY	TBD
E. SITE CLASSIFICATION	TBD
F. IMPORTANCE FACTOR	I = 1.25
G. BASIC SEISMIC FORCE RESISTING SYSTEM:	MASONRY SHEAR WALLS
H. ANALYSIS PROCEDURE:	EQUIVALENT LATERAL FORCE PROCEDURE

C. WIND LOADS

1.WIND PARAMETERS USED IN DESIGN ARE AS FOLLOWS:

A. BASE WIND SPEED = 90 MPH
B. EXPOSURE CATEGORY = B
C. IMPORTANCE FACTOR, I = 1.15

D. SNOW LOADS

1. THE BUILDING IS DESIGNED FOR SNOW LOADS AS PER THE DISTRICT OF COLUMBIA BUILDING CODE.

E. FOUNDATION NOTES

1. UNLESS NOTED OTHERWISE, FOUNDATION SHALL BE DESIGNED AS FOLLOWS BASED ON FOUNDATIONS RECOMMENDATIONS IN THE GEOTECHNICAL REPORT AND ITS ADDENDUM PREPARED BY THOMAS L. BROWN ASSOCIATES, P.C. FOUNDATION CAPACITIES SHALL BE FIELD VERIFIED BY THE GEOTECHNICAL CONSULTANT.
   A. SPREAD FOOTINGS AND FOUNDATION WALLS:

ALLOWABLE SOIL BEARING PRESSURE:	4500 PSF AND 3000 PSF
PASSIVE SOIL PRESSURE:	TBD
ACTIVE SOIL PRESSURE:	TBD
AT–REST SOIL PRESSURE COEFFICIENT:	0.51
ANGLE OF FRICTION:	26

   B. MINIPILES: CASING SHALL BE 8" DIAMETER WITH 1/2" WALL THICKNESS, FILLED WITH 5000PSI GROUT AND WITH 1–#18 CENTER BAR. MINIMUM LENTGH OF PILE TO BE 37 FEET
2. CONTRACTOR SHALL FAMILIARIZE HIMSELF WITH GEOTECHNICAL REPORT AND WITH THE SUBSURFACE CONDITIONS BEFORE COMMENCING EXCAVATION.
3. NO BACKFILLING SHALL BE DONE AGAINST FOUNDATION AND RETAINING WALLS UNTIL CONCRETE HAS ATTAINED AT LEAST 75%%% OF ITS DESIGN STRENGTH. BEFORE BACK FILLING, PROVIDE BRACING FOR WALL SUSTAINING MORE THAN 3 FEET OF EARTH PRESSURE, THIS BRACING SHALL REMAIN IN PLACE UNTIL ALL SLABS AND BEAMS FRAMING INTO WALL HAVE BEEN PLACED AND SET.
4. IN NO CASE SHALL BULLDOZERS OR OTHER HEAVY EQUIPMENT BE PERMITTED CLOSER THAN 8 FEET FROM ANY FOUNDATION WALL. IF IT IS NECESSARY TO OPERATE SUCH EQUIPMENT CLOSER THAN 8 FEET TO THE WALL. THE CONTRACTOR SHALL BE THE SOLE RESPONSIBLE PARTY AND AT THEIR OWN EXPENSE SHALL PROVIDE ADEQUATE SUPPORTS OR BRACE THE WALL TO WITHSTAND THE ADDITIONAL LOADS SUPERIMPOSED FROM SUCH EQUIPMENT.
5. CONTRACTOR SHALL BE RESPONSIBLE TO ADEQUATELY PROTECT ALL EXCAVATION SLOPES. WHERE NECESSARY, SHEETING AND SHORING OF EXCAVATION SHALL BE PROVIDED WITH ALL REQUIRED TIEBACKS AND BRACING.
6. METHODS EMPLOYED IN ALL SHEETING AND SHORING SHALL BE DESIGNED BY A PROFESSIONAL ENGINEER, LICENSED IN THE DISTRICT OF COLUMBIA.
7. A SIX–INCH PERIMETER FOUNDATION DRAIN SHALL BE INSTALLED ADJACENT TO ALL FOOTINGS AND PIT. ALL FOUNDATION BACKFILL SHALL BE COMPOSED OF SATISFACTORY STRUCTURAL FILL, PLACED IN LAYERS NOT TO EXCEED EIGHT INCHES AND COMPACTED TO 95% OF MODIFIED PROCTOR AS DETERMINED BY ASTM D–1557
8. THE FOOTING AND MAT SLAB SUBGRADES MUST BE COVERED BY FOUNDATION CONCRETE OR A MINIMUM OF 3" LEAN CONCRETE MUD SLAB WITHIN 3 HOURS OF SUBGRADE APPROVAL BY THE GEOTECHNICAL ENGINEER. RE–INSPECT ANY FOOTING SUBGRADES THAT WERE NOT COVERED AS PER ABOVE.
9. THE SLAB–ON–GRADE SUBGRADE MUST BE PREPARED PER THE RECOMMENDATION OF THE GEOTECHNICAL REPORT AND MUST BE COMPACTED TO 95%%% OF MAXIMUM DRY DENSITY PER ASTM D–698.

F. REINFORCED CONCRETE NOTES

1. STRUCTURAL CONCRETE AND CONCRETING PRACTICES SHALL CONFORM WITH ACI–318, "AMERICAN CONCRETE INSTITUTE, BUILDING CODE REQUIREMENTS FOR STRUCTURAL CONCRETE" LATEST EDITION. DETAILS SHALL BE IN ACCORDANCE WITH ACI–315, "DETAILS AND DETAILING OF CONCRETE REINFORCEMENT" UNLESS OTHERWISE NOTED ON THE DRAWINGS. ALL ACI REQUIREMENTS FOR HOT AND COLD WEATHER CONCRETING MUST BE ADHERED TO.
2. CONCRETE SHALL HAVE A MIN. COMPRESSIVE STRENGTH AT 28 DAYS AS FOLLOWS UNLESS OTHERWISE NOTED ON THE DWGS

A. CONCRETE ON METAL DECK:	4000 PSI, LIGHT WEIGHT
B. ALL OTHER CONCRETE:	4000 PSI, NORMAL WEIGHT

3. ALL EXPOSED CONCRETE SHALL HAVE AN AIR ENTRAINING AGENT. ALL SLABS AT GROUND FLOOR OUTSIDE THE ENVELOPE OF EXTERIOR WALL SHALL BE CONSIDERED AS "EXPOSED CONCRETE."
4. ALL REINFORCING BARS SHALL CONFORM TO ASTM A615, GRADE 60.
5. WELDED WIRE FABRIC SHALL CONFORM TO ASTM A185. SUPPORT WIRE FABRIC WITH CHAIRS OR LIFTS, DURING CONCRETE PLACEMENT TO INSURE PROPER POSITION IN SLAB.
6. ALL REINFORCEMENT SHALL BE SECURELY HELD IN PLACE WHILE PLACING CONCRETE. IF REQUIRED, ADDITIONAL BARS OR STIRRUPS SHALL BE PROVIDED BY THE CONTRACTOR TO FURNISH SUPPORT FOR ALL BARS.
7. ALL REINFORCING BARS SHALL BE LAPPED AS SPECIFICALLY DETAILED ON THE DRAWINGS. SEE SPLICE AND EMBEDMENT SCHEDULE. WHERE NOT SPECIFICALLY INDICATED ON THE DRAWINGS, ALL REINFORCING BARS SHALL BE LAPPED USING THE TENSION SPLICE LENGTHS IN THE LAP SPLICE SCHEDULE.
   A. LAP GRADE BEAM AND WALL TOP HORIZONTAL REINFORCEMENT AT CENTER OF SPAN
   B. LAP GRADE BEAM AND WALL BOTTOM HORIZONTAL REINFORCEMENT AT SUPPORT
   C. LAP INSIDE FACE WALL VERTICAL REINFORCEMENT AT SUPPORT.
   D. LAP OUTSIDE FACE VERTICAL WALL REINFORCEMENT AT MIDHEIGHT OF WALL
   E. UNLESS OTHERWISE NOTED TERMINATE BARS AT DISCONTINUOUS ENDS WITH STANDARD HOOKS.
   F. ALL HOOKED BARS NOT DIMENSIONED SHALL BE STANDARD HOOKS
8. MINIMUM CONCRETE COVER SHALL BE AS FOLLOWS, UNLESS NOTED OTHERWISE ON THE DRAWINGS:

A. SLABS:	3/4 INCH
B. WALLS:	1 INCH
C. ALL CONCRETE EXPOSED TO WEATHER OR EARTH	2 INCHES
D. ALL CONCRETE CAST AGAINST EARTH:	3 INCHES

9. PROVIDE CONSTRUCTION JOINTS IN ACCORDANCE WITH ACI–318, CHAPTER 6.4. SUBMIT SHOP DRAWINGS SHOWING CONSTRUCTION JOINT DETAILS, LOCATIONS AND THE SEQUENCE OF POURS FOR THE STRUCTURAL ENGINEER'S REVIEW PRIOR TO BEGINNING WORK.
10. WALL AND GRADE BEAM CONSTRUCTION JOINTS SHALL BE LOCATED TO PROVIDE A 60 FOOT MAXIMUM LENGTH OF CONCRETE PLACEMENT.
11. VERTICAL CONSTRUCTION JOINTS IN GRADE BEAMS AND WALLS SHALL BE USED ONLY WITH PRIOR APPROVAL OF THE ENGINEER (SEE NOTE 9 ABOVE), AND SHALL BE LOCATED AS FOLLOWS:
   A. FOUNDATION WALLS: MINIMUM 8'–0" FROM ANY COLUMN LINE OR WALL OPENING
   B. GRADE BEAMS: AT CENTERLINES BETWEEN SUPPORTS
12. NO HORIZONTAL CONSTRUCTION JOINTS WILL BE PERMITTED IN BEAMS, WALLS AND SLABS UNLESS SPECIFICALLY SHOWN ON THE DRAWINGS OR APPROVED IN WRITING PRIOR TO CONSTRUCTION BY THE ENGINEER.
13. NO CONCRETE TEST WILL BE ACCEPTED IF CONCRETE IS TAMPERED WITH IN ANY WAY AFTER SAID TEST IS PERFORMED.
14. ALL ADJOINING SURFACES NOT CAST MONOLITHICALLY SHALL BE ROUGHENED TO 1/4 INCH AMPLITUDE FOR THE ENTIRE INTERSECTING SURFACE ACCORDING TO ACI RECOMMENDATIONS AND APPLY A BONDING AGENT AS REQUIRED.
15. CONTRACTOR SHALL FIELD VERIFY DIMENSIONS AND LOCATIONS OF ALL OPENINGS, PIPE SLEEVES, CURBS ETC., AS REQUIRED BY OTHER TRADES BEFORE CONCRETE IS PLACED.
16. CONTRACTOR SHALL COORDINATE SLAB DEPRESSIONS FOR FLOOR FINISHES WITH THE ARCHITECTURAL DRAWINGS.
17. CONTRACTOR SHALL COORDINATE LOCATION OF FLOOR DRAINS, CURBS, CONCRETE PADS AND FLOOR DEPRESSIONS, ETC. WITH THE ARCHITECTURAL AND MECHANICAL DRAWINGS.
18. CONTRACTOR SHALL COORDINATE LOCATION OF INSERTS, WELDED PLATES, AND OTHER ITEMS TO BE EMBEDDED IN CONCRETE WITH ARCHITECTURAL AND MECHANICAL DRAWINGS.
19. HORIZONTAL PIPES OR CONDUITS PLACED IN SLABS SHALL NOT BE SPACED CLOSER THAN 3 X THE DIAMETER ON CENTER. PIPES AND CONDUITS PLACED IN SLABS SHALL NOT HAVE AN OUTSIDE DIAMETER LARGER THAN 1/3 OF SLAB THICKNESS. ALUMINUM CONDUITS SHALL NOT BE PLACED IN CONCRETE. NO CONDUITS SHALL BE PLACED IN THE SLAB WITHIN 12 INCHES OF ANY COLUMN FACE. SEE TYPICAL DETAILS.
20. CONTRACTOR SHALL USE RIGID STEEL TEMPLATES (SUPPLIED BY THE STEEL FABRICATOR) TO INSTALL ANCHOR RODS.

G. FORMWORK AND SHORING NOTES

1. SHORES SHALL BE DESIGNED AND DETAILED BY A PROFESSIONAL ENGINEER LICENSED IN THE DISTRICT OF COLUMBIA. DRAWINGS ILLUSTRATING THE SHORING SYSTEM AND SEQUENCING SHALL BE SIGNED AND SEALED BY SAID ENGINEER.
2. DESIGN AND ERECT FORMS AND SHORES IN ACCORDANCE WITH ACI–347. DESIGN FORMS AND SHORES FOR HORIZONTAL CONCRETE MEMBERS FOR NOT LESS THAN DEAD LOAD PLUS 50 PSF CONSTRUCTION LOAD AND FOR THE CUMULATIVE LOADS OF SUPPORTING FLOOR SLABS. DESIGN SHORES WITH A MINIMUM FACTOR OF SAFETY OF 3.
3. USE A MAXIMUM SPACING OF RESHORING OF EIGHT FEET IN EACH DIRECTION.
4. PROVIDE TEMPORARY BRACING AS NEEDED TO ENSURE STABILITY OF STRUCTURE DURING CONSTRUCTION.

H. REINFORCED MASONRY NOTES

1. CONCRETE MASONRY WORK SHALL CONFORM TO ACI 530 BUILDING CODE REQUIREMENTS FOR MASONRY STRUCTURES, AND THE SPECIFICATIONS FOR THE DESIGN AND CONSTRUCTION OF LOAD BEARING CONCRETE MASONRY, NCMA.
2. MORTAR SHALL BE TYPE M OR S MORTAR ONLY AND SHALL CONFORM TO THE SPECIFICATIONS.
3. GROUT SHALL CONFORM TO SPECIFICATIONS WITH A MINIMUM 28 DAY COMPRESSIVE STRENGTH OF 3000 PSI WITH A MINIMUM SLUMP OF 8 INCHES. GROUT SHALL BE USED AS FILLING FOR VERTICAL CAVITIES, BOND BEAMS, LINTELS AND HOLLOW MASONRY UNITS DESIGNATED AS SOLID GROUTED IN THE DRAWINGS. MORTAR SHALL NOT BE USED TO FILL CELLS.
4. CONCRETE MASONRY UNITS SHALL BE STANDARD HOLLOW LOAD BEARING CONCRETE MASONRY UNITS, WITH A MINIMUM 28 DAY COMPRESSIVE STRENGTH OF 3000 PSI ON NET SECTION, DEVELOPING A MINIMUM COMPRESSIVE STRENGTH OF MASONRY OF 1800 PSI IN 28 DAYS (F'm) WHEN LAID IN TYPE S MORTAR.
5. REFER TO ARCHITECTURAL DRAWINGS FOR SIZE AND LOCATIONS OF MASONRY WALLS AND FOR DETAILS OF EXPANSION JOINTS AND CONTROL JOINTS.
6. HORIZONTAL REINFORCING BARS SHALL BE PLACED IN THE CONTINUOUS MASONRY COURSES CONSISTING OF BOND BEAM OR THROUGH BLOCK UNITS, AND SHALL BE SOLIDLY GROUTED IN PLACE.
7. SEE SPECIFICATIONS FOR TESTING AND INSPECTION REQUIREMENTS.

I. METAL DECK NOTES

1. DESIGN OF METAL DECK SHALL BE GOVERNED BY THE "SPECIFICATIONS FOR DESIGN OF LIGHT GAGE COLD FORMED STEEL STRUCTURAL MEMBERS" AS PUBLISHED BY THE AMERICAN IRON AND STEEL INSTITUTE (AISI) AND CONFORM TO THE "BASIC DESIGN SPECIFICATIONS" OF THE STEEL DECK INSTITUTE.
2. REFER TO INDIVIDUAL PLAN NOTES FOR COMPOSITE OR ROOF DECK TO BE USED AT EACH LEVEL.
3. STEEL DECK UNITS AND ACCESSORIES SHALL BE FABRICATED FROM STEEL SHEET CONFORMING TO ASTM A653 SQ GRADE 33, WITH A MINIMUM YIELD POINT OF 33 ksi.
4. ALL METAL DECK SHALL BE FABRICATED AND INSTALLED FOR A MINIMUM TWO SPAN CONDITION. ONE SPAN CONDITIONS ARE PROHIBITED UNLESS SPECIFICALLY CALLED FOR ON THE DRAWINGS.
5. COMPOSITE FLOOR DECK UNITS SHALL BE FASTENED TO THE STEEL FRAMEWORK AS FOLLOWS:
   A. AT ENDS OF UNITS AND AT ALL INTERMEDIATE SUPPORTS: BY WELDS NOT LESS THAN 3/4 INCH DIAMETER SPACED AT 12 INCHES ON CENTER MAXIMUM.
   B. SIDE LAPS OF ADJACENT UNITS: MAY BE FASTENED BETWEEN SUPPORTS BY SIDE SEAM WELDING (MINIMUM OF 1–1/2 INCH BY 1/2 INCH) OR BUTTON PUNCHING AT INTERVALS NOT EXCEEDING 24 INCHES ON CENTER.
6. METAL ROOF DECK UNITS SHALL BE FASTENED TO THE STEEL FRAMEWORK:
   A. AT ENDS OF UNITS AND AT ALL INTERMEDIATE SUPPORTS: BY PUDDLE WELDS NOT LESS THAN 3/4 INCH DIAMETER SPACED NOT MORE THAN 8 INCHES ON CENTER MAXIMUM.
   B. SIDE LAPS OF ADJACENT UNITS: SHALL BE FASTENED BY SIDE SEAM WELDING OR SIDELAP SCREWS SPACED PER MANUFACTURERS ENGINEERED CALCULATIONS WITH A MAXIMUM SPACING OF 24 INCHES ON CENTER. ARC SEAM WELDS SHALL BE A MINIMUM OF 1–1/2 INCH BY 1/2 INCH.
7. THE MINIMUM DIAPHRAGM SHEAR DESIGN VALUE FOR THE ROOF METAL DECK ASSEMBLY SHALL BE 400 POUNDS PER LINEAR FOOT FOR THE 3 INCH DECK.
8. IN ADDITION TO THE ABOVE DIAPHRAGM FORCES, ROOF DECK FASTENERS SHALL BE DESIGNED FOR A NET 15 PSF UPLIFT FORCE MINIMUM.
9. THE HANGING OF ANY LOADS FROM A ROOF DECK IS STRICTLY PROHIBITED.

J. STRUCTURAL STEEL NOTES

1. FABRICATION AND ERECTION OF STRUCTURAL STEEL SHALL CONFORM TO THE AMERICAN INSTITUTE OF STEEL CONSTRUCTION, "MANUAL OF STEEL CONSTRUCTION, LOAD AND RESISTANCE FACTOR DESIGN" (LATEST EDITION).
2. ALL STEEL DETAILS AND CONNECTIONS SHALL BE IN ACCORDANCE WITH THE REQUIREMENTS OF THE AISC "SPECIFICATION FOR STRUCTURAL STEEL BUILDINGS", LATEST EDITION.
3. STEEL MATERIALS SHALL CONFORM TO THE FOLLOWING UNLESS OTHERWISE NOTED ON THE DRAWINGS:
   A. ALL ROLLED SHAPES AND CHANNELS: ASTM A–572 OR A–992, MIN. YIELD STRENGTH OF 50 KSI
   B. MISCELLANEOUS ANGLES: ASTM A–36, MIN. YIELD STRENGTH OF 36 KSI
4. STEEL FOR SHEAR STUD CONNECTORS SHALL CONFORM TO THE REQUIREMENTS OF ARTICLES 429 AND 430, IN THE LATEST EDITION OF THE CODE FOR WELDING IN BUILDING CONSTRUCTION, AWS D.1–1 OF THE AMERICAN WELDING SOCIETY. SUBMIT FOR RECORD THE MANUFACTURER CERTIFICATION WHICH SHALL CONSTITUTE SUFFICIENT EVIDENCE OF CONFORMITY WITH SPECIFICATIONS.
5. ALL CONNECTIONS SHALL BE 7/8 INCH DIA. A325 SLIP CRITICAL TYPE B U.O.N.
6. SLOTTED HOLES SHALL NOT BE USED FOR ANY CONNECTIONS UNLESS SPECIFICALLY INDICATED ON THE DRAWINGS OR APPROVED IN WRITING BY THE ENGINEER.
7. FOR ALL TRUSS DETAILS USE A MINIMUM BOLT SPACING OF 3 TIMES THE BOLT DIAMETER FOR ALL BOLTS AND A MINIMUM EDGE DISTANCE OF 2" FOR ALL BOLTS, REFER TO TYPICAL DETAIL.
8. ALL BUTT AND FULL PENETRATION WELDS SHALL BE MADE USING RUN OFF TABS WHICH SHALL BE REMOVED AND GROUND SMOOTH AFTER WELD IS COMPLETED.
9. ALL WELD BACK UP BARS SHALL BE REMOVED AND GROUND SMOOTH AFTER WELD IS COMPLETED.
10. ALL WELDS INDICATED SHALL MEET THE MINIMUM WELD SIZE SPECIFIED BY THE AISC MANUAL OF STEEL DESIGN. (SINGLE PASS AS REQUIRED).
11. ALL WELDS SHALL BE PERFORMED BY QUALIFIED WELDERS IN ACCORDANCE WITH A.W.S. SPECIFICATIONS, LATEST EDITIONS. ALL WELDING ELECTRODES SHALL CONFORM TO A.W.S. A5.1 GRADE E–70. BARE ELECTRODES AND GRANULAR FLUX SHALL CONFORM TO A.W.S. A5.17, F70 A.W.S. FLUX CLASSIFICATION.
12. ALTERNATE CONNECTIONS WILL BE ACCEPTED ONLY WITH THE WRITTEN APPROVAL OF THE ENGINEER. HOWEVER, THE ENGINEER SHALL BE THE SOLE JUDGE OF ACCEPTABILITY AND THE CONTRACTOR'S BID SHALL ANTICIPATE THE USE OF THOSE SPECIFIC DETAILS SHOWN ON THE DRAWINGS. IN ANY EVENT THE CONTRACTOR SHALL BE RESPONSIBLE FOR THE DESIGN OF SUCH ALTERNATE DETAILS.
13. SPLICES SHALL BE ALLOWED ONLY AT LOCATIONS SPECIFICALLY INDICATED ON THE STRUCTURAL DRAWINGS UNLESS APPROVED OTHERWISE BY THE ENGINEER IN WRITING.
14. ALL BEAMS AND GIRDERS SHALL BE CONNECTED FOR THE REACTION DENOTED BY THE SYMBOL V ON THE PLAN. PROVIDE A MINIMUM 2 BOLT CONNECTION IF NO REACTION IS GIVEN. PROVIDE CONNECTION FOLLOWING NOTE 21 BELOW.
15. ALL BEAM AND GIRDER CONNECTIONS SHALL BE AT LEAST CAPABLE OF DEVELOPING THE UNIFORMLY DISTRIBUTED LOAD CAPACITY OF THE MEMBER USING THE REACTION AS TABULATED IN THE AISC MANUAL OF STEEL CONSTRUCTION ASD 9TH EDITION X 1.15 UNLESS NOTED OTHERWISE. FOR COMPOSITE BEAMS MULTIPLY THE REACTION BY THE RATIO Str/S WHERE Str = SECTION MODULUS OF THE TRANSFORMED COMPOSITE CROSS SECTION WITH RESPECT TO THE BOTTOM FLANGE, AND S = SECTION MODULUS OF THE STRUCTURAL STEEL ALONE. FORCES GIVEN ON DRAWINGS ARE ASD (UNFACTORED) VALUES.
16. PROVIDE WELDED STIFFENER PLATES ON BOTH SIDES OF THE WEB OF BEAMS AT POINTS OF CONCENTRATED LOAD. MINIMUM PLATE THICKNESS TO BE 1/2" OR FLANGE THICKNESS OF COLUMNS ABOVE OR BELOW, WHICHEVER IS GREATER, REFER TO TYPICAL DETAILS.
17. FILLER BEAMS SHOULD BE SPACED EQUALLY BETWEEN SUPPORTS UNLESS OTHERWISE NOTED ON THE DRAWINGS.
18. THE DISTANCE FROM THE EDGE OF A SLAB OPENING TO THE FLANGE OF THE BEAM IS TYPICALLY 2", U.N.O. ON PLANS, REFER TO THE TYPICAL DETAIL.
19. THE STRUCTURAL STEEL CONTRACTOR SHALL COORDINATE THE BOTTOM OF BASE PLATE ELEVATION WITH THE TOP OF CONCRETE ELEVATION.
20. PROVIDE ANY TEMPORARY BRACING OR GUYS TO PROVIDE LATERAL SUPPORT OF THE BUILDING AND INDIVIDUAL ELEMENTS UNTIL PERMANENT FRAME IS COMPLETELY INSTALLED.
21. THE CONTRACTOR SHALL SUBMIT A STEEL ERECTION PROCEDURE, PREPARED UNDER THE SUPERVISION OF A PROFESSIONAL ENGINEER LICENSED IN THE DISTRICT OF COLUMBIA (THE CONTRACTOR'S ENGINEER) FOR REVIEW BY THE STRUCTURAL ENGINEER OF RECORD. THIS PROCEDURE MUST INCLUDE THE PROPOSED SURVEY REQUIRED BY THE STEEL SPECIFICATIONS.

NOT FOR CONSTRUCTION

GEORGETOWN LIBRARY
3260 R Street,NW
WASHINGTON, DC

Client
DISTRICT OF COLUMBIA PUBLIC LIBRARY
901 G Street, NW
Washington, D.C. 20001

Architect
MARTINEZ & JOHNSON | ARCHITECTURE
1238 Wisconsin Avenue, NW, Suite 302
Washington, D.C. 20007
202.333.4480

Library Architect
HOSHIDE WILLIAMS ARCHITECTS
206.325.6441

Landscape Architect
Lee + Papa and Associates
202.446.6666

Structural Engineer
RESTL DESIGNERS, INC.
301.258.0093

MEP Engineer
JOHN J. CHRISTIE & ASSOCIATES, P.C
202.364.4410

THESE DRAWINGS, SPECIFICATIONS, AND OTHER DOCUMENTS, (COLLECTIVELY, THE "DOCUMENTS") INCLUDING WITHOUT LIMITATION ELECTRONIC VERSIONS THEREOF AND THE IDEAS, DESIGNS, AND ARRANGEMENTS REPRESENTED THEREBY, ARE AND SHALL REMAIN THE PROPERTY OF MARTINEZ & JOHNSON ARCHITECTURE PC, AS DEFINED BY APPLICABLE CONTRACTUAL AGREEMENTS ("THE AGREEMENTS") AND AS PROTECTED BY THE COPYRIGHT STATUTES OF THE UNITED STATES. USE OF THE DOCUMENTS SHALL BE STRICTLY LIMITED TO THE PROJECT FOR WHICH THEY WERE PREPARED AND DEVELOPED ("THE PROJECT") PER THE TERMS OF THE AGREEMENTS. NO PART OF THE DOCUMENTS SHALL BE COPIED, DISCLOSED TO OTHERS, OR USED IN CONNECTION WITH ANY OTHER WORK OR PROJECT, OR BY ANY OTHER PERSONS FOR ANY PURPOSES, OTHER THAN THE COMPLETION OF THE PROJECT, WITHOUT THE SPECIFIC WRITTEN AUTHORIZATION OF MARTINEZ & JOHNSON ARCHITECTURE PC. THE DOWNLOADING, OPENING, OR VIEWING OF ELECTRONIC VERSIONS OF THE DOCUMENTS OR VISUAL CONTACT WITH ANY PRINTED FORM THEREOF SHALL CONSTITUTE CONCLUSIVE EVIDENCE OF ACCEPTANCE OF THESE RESTRICTIONS.

MJ/A Project No.7590

DATE:	DESCRIPTION:
09.01.08	DESIGN DEVELOPMENT
12.19.08	PERMIT SET
01.26.09	PERMIT SET

SHEET TITLE:

GENERAL NOTES

S1.0

© 2008 MJ/A

RESTL Designers Inc.- S:\GNLR\DRAWINGS\STRUCT\CURRENT\S1.0.dwg
[S1.0] 01/23/09 - 4:38pm BChang

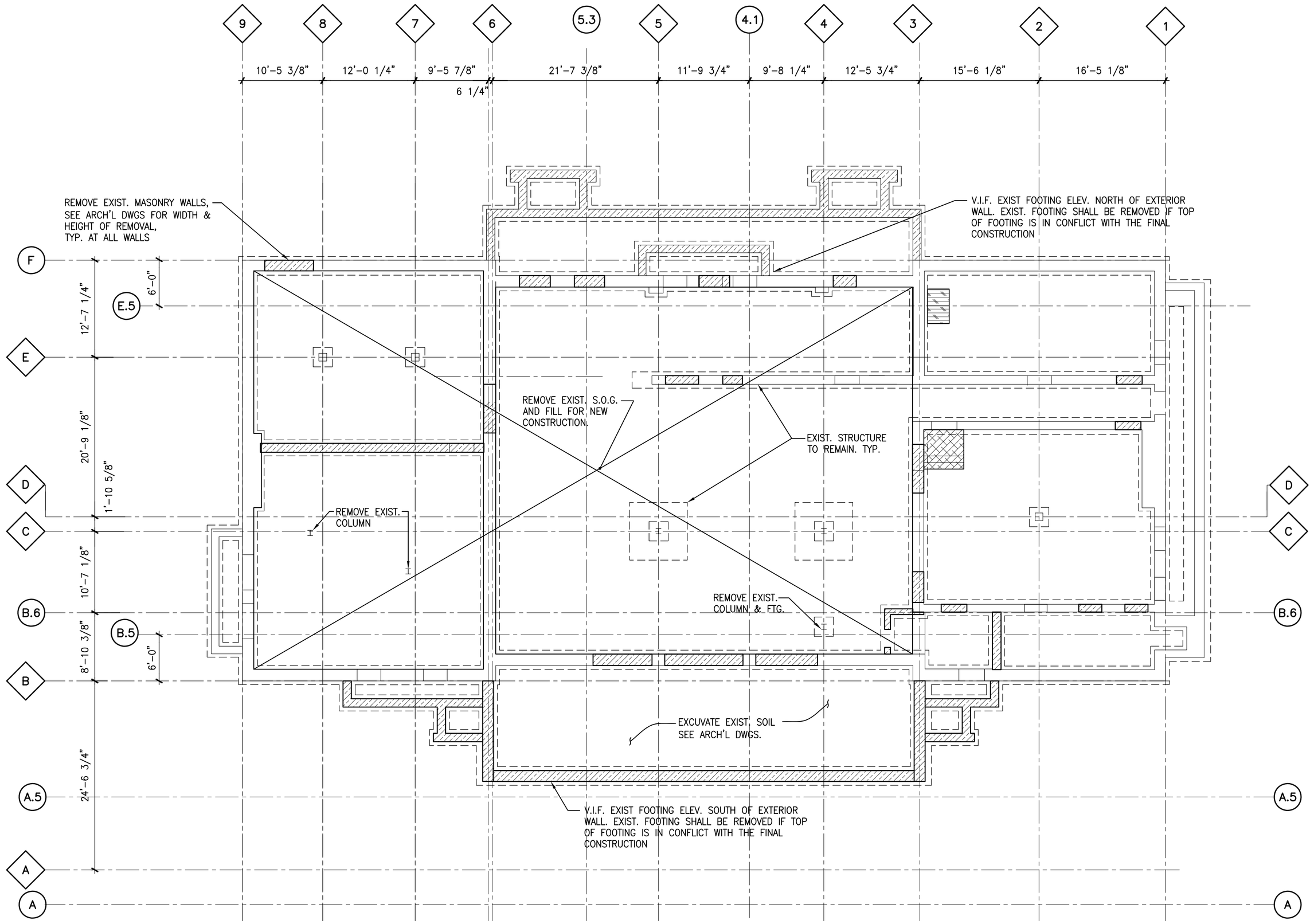

LOWER LEVEL DEMOLITION PLAN

SCALE: 1/8"=1'-0"

1. : INDICATES EXIST. CONSTRUCTION TO BE REMOVED.
   : INDICATES REMOVAL OF EXISTING S.O.G. AS REQ'D FOR PILE CAP INSTALLATION
2. CONTRACTOR SHALL PROVIDE TEMPORARY SHORING AS NECESSARY TO MAINTAIN STRUCTURAL STABILITY BEFORE REMOVAL. THE TEMPORARY SHORING SHALL NOT BE REMOVED UNTIL PERMANENT SUPPORT STRUCTURE IS IN PLACE.
3. IF DEMOLITION UNDERMINES EXISTING FOOTING, THE CONTRACTOR SHALL PROVIDE UNDERPINNING TO ENSURE SAFETY AND STABILITY OF THE EXISTING BUILDING.

Plan North

NOT FOR CONSTRUCTION

GEORGETOWN LIBRARY

3260 R Street,NW
WASHINGTON, DC

Client
DISTRICT OF COLUMBIA PUBLIC LIBRARY
901 G Street, NW
Washington, D.C. 20001

Architect
MARTINEZ & JOHNSON | ARCHITECTURE
1238 Wisconsin Avenue, NW, Suite 302
Washington, D.C. 20007
202.333.4480

Library Architect
HOSHIDE WILLIAMS ARCHITECTS
206.325.6441

Landscape Architect
Lee + Papa and Associates
202.446.6666

Structural Engineer
RESTL DESIGNERS, INC.
301.258.0093

MEP Engineer
JOHN J. CHRISTIE & ASSOCIATES, P.C
202.364.4410

THESE DRAWINGS, SPECIFICATIONS, AND OTHER DOCUMENTS, (COLLECTIVELY, THE "DOCUMENTS") INCLUDING WITHOUT LIMITATION ELECTRONIC VERSIONS THEREOF AND THE IDEAS, DESIGNS, AND ARRANGEMENTS REPRESENTED THEREBY, ARE AND SHALL REMAIN THE PROPERTY OF MARTINEZ & JOHNSON ARCHITECTURE PC, AS DEFINED BY APPLICABLE CONTRACTUAL AGREEMENTS ("THE AGREEMENTS") AND AS PROTECTED BY THE COPYRIGHT STATUTES OF THE UNITED STATES. USE OF THE DOCUMENTS SHALL BE STRICTLY LIMITED TO THE PROJECT FOR WHICH THEY WERE PREPARED AND DEVELOPED ("THE PROJECT") PER THE TERMS OF THE AGREEMENTS. NO PART OF THE DOCUMENTS SHALL BE COPIED, DISCLOSED TO OTHERS, OR USED IN CONNECTION WITH ANY OTHER WORK OR PROJECT, OR BY ANY OTHER PERSONS FOR ANY PURPOSES, OTHER THAN THE COMPLETION OF THE PROJECT, WITHOUT THE SPECIFIC WRITTEN AUTHORIZATION OF MARTINEZ & JOHNSON ARCHITECTURE PC. THE DOWNLOADING, OPENING, OR VIEWING OF ELECTRONIC VERSIONS OF THE DOCUMENTS OR VISUAL CONTACT WITH ANY PRINTED FORM THEREOF SHALL CONSTITUTE CONCLUSIVE EVIDENCE OF ACCEPTANCE OF THESE RESTRICTIONS.

MJ/A Project No.7590

DATE:	DESCRIPTION:
09.01.08	DESIGN DEVELOPMENT
12.19.08	PERMIT SET
01.26.09	PERMIT SET

SHEET TITLE:

LOWER LEVEL DEMOLITION PLAN

S2.0D

© 2008 MJ/A

RESTL Designers Inc.- S:\GNLR\DRAWINGS\STRUCT\CURRENT\S2.0D.dwg
[S2.0D] 01/23/09 - 4:38pm BChang

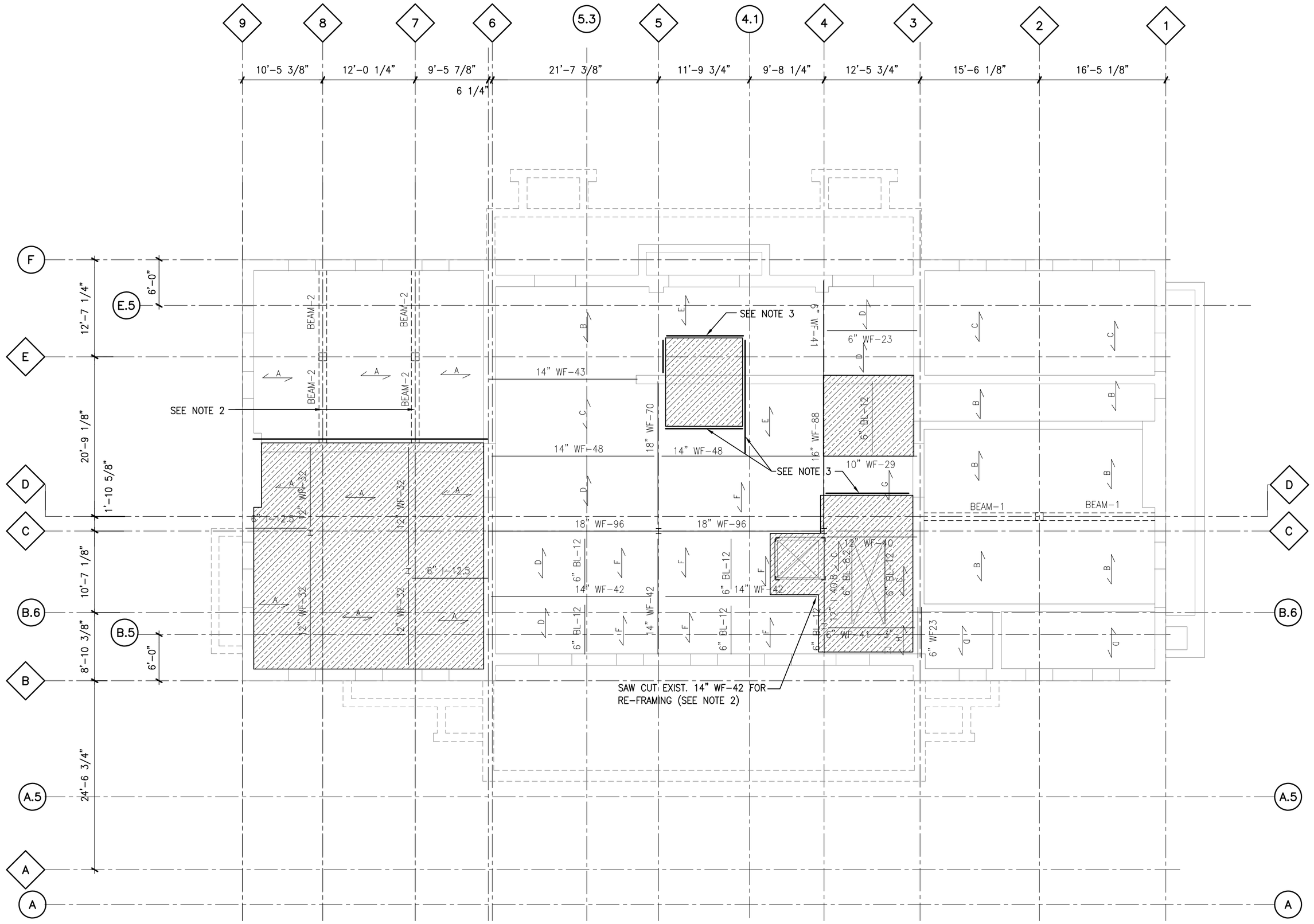

FIRST FLOOR DEMOLITION PLAN

SCALE: 1/8"=1'-0"

NOTES:

1. ▨ : INDICATE EXIST. CONSTRUCTION TO BE REMOVED.
   SEE ARCH'L DWGS FOR LOCATION & EXTENT OF REMOVAL.
2. CONTRACTOR SHALL PROVIDE TEMPORARY SHORING AS NECESSARY TO MAINTAIN STRUCTURAL STABILITY BEFORE REMOVAL. THE TEMPORARY SHORING SHALL NOT BE REMOVED UNTIL PERMANENT STRUCTURE IS IN PLACE.
3. FRAMING MUST BE INSTALLED BEFORE DEMOLITION (SEE FRAMING PLAN), OR PROVIDE TEMPORARY SHORING BEFORE DEMOLITION AND KEEP SHORING UNTIL FINAL FRAMING IS INSTALLED.

NOT FOR CONSTRUCTION

GEORGETOWN LIBRARY

3260 R Street,NW
WASHINGTON, DC

Client
DISTRICT OF COLUMBIA PUBLIC LIBRARY
901 G Street, NW
Washington, D.C. 20001

Architect
MARTINEZ & JOHNSON | ARCHITECTURE
1238 Wisconsin Avenue, NW, Suite 302
Washington, D.C. 20007
202.333.4480

Library Architect
HOSHIDE WILLIAMS ARCHITECTS
206.325.6441

Landscape Architect
Lee + Papa and Associates
202.446.6666

Structural Engineer
RESTL DESIGNERS, INC.
301.258.0093

MEP Engineer
JOHN J. CHRISTIE & ASSOCIATES, P.C
202.364.4410

THESE DRAWINGS, SPECIFICATIONS, AND OTHER DOCUMENTS, (COLLECTIVELY, THE "DOCUMENTS") INCLUDING WITHOUT LIMITATION ELECTRONIC VERSIONS THEREOF AND THE IDEAS, DESIGNS, AND ARRANGEMENTS REPRESENTED THEREBY, ARE AND SHALL REMAIN THE PROPERTY OF MARTINEZ & JOHNSON ARCHITECTURE PC, AS DEFINED BY APPLICABLE CONTRACTUAL AGREEMENTS ("THE AGREEMENTS") AND AS PROTECTED BY THE COPYRIGHT STATUTES OF THE UNITED STATES. USE OF THE DOCUMENTS SHALL BE STRICTLY LIMITED TO THE PROJECT FOR WHICH THEY WERE PREPARED AND DEVELOPED ("THE PROJECT") PER THE TERMS OF THE AGREEMENTS. NO PART OF THE DOCUMENTS SHALL BE COPIED, DISCLOSED TO OTHERS, OR USED IN CONNECTION WITH ANY OTHER WORK OR PROJECT, OR BY ANY OTHER PERSONS FOR ANY PURPOSES, OTHER THAN THE COMPLETION OF THE PROJECT, WITHOUT THE SPECIFIC WRITTEN AUTHORIZATION OF MARTINEZ & JOHNSON ARCHITECTURE PC. THE DOWNLOADING, OPENING, OR VIEWING OF ELECTRONIC VERSIONS OF THE DOCUMENTS OR VISUAL CONTACT WITH ANY PRINTED FORM THEREOF SHALL CONSTITUTE CONCLUSIVE EVIDENCE OF ACCEPTANCE OF THESE RESTRICTIONS.

MJ/A Project No.7590

DATE:	DESCRIPTION:
09.01.08	DESIGN DEVELOPMENT
12.19.08	PERMIT SET
01.26.09	PERMIT SET

SHEET TITLE:

FIRST FLOOR DEMOLITION PLAN

S2.1D

© 2008 MJ/A

RESTL Designers Inc.- S:\GNLR\DRAWINGS\STRUCT\CURRENT\S2.1D.dwg
[S2.1D] 01/23/09 - 4:39pm BChang

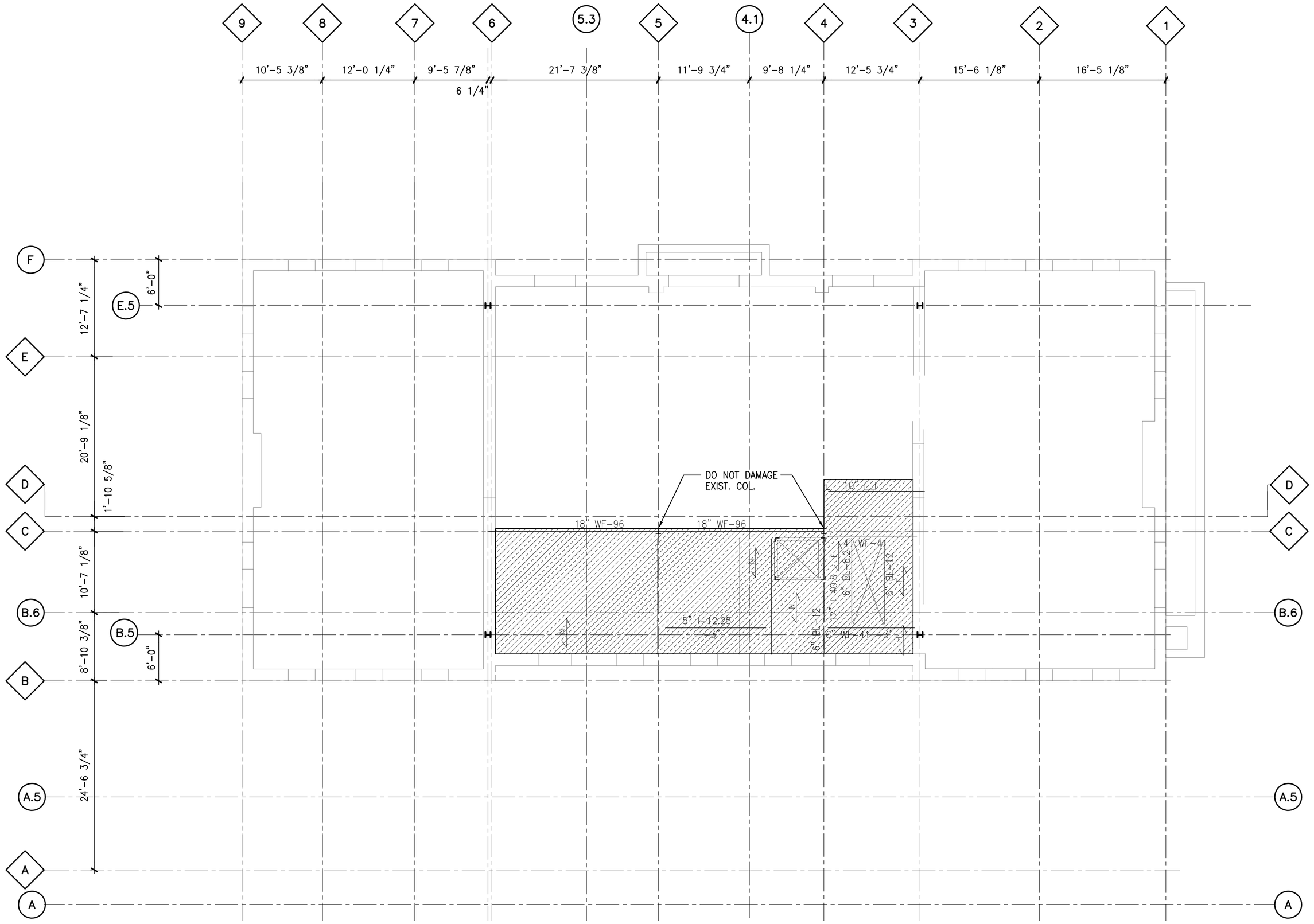

MEZZANINE FLOOR DEMOLITION PLAN

SCALE: 1/8"=1'-0"

1. ▨ : INDICATE EXIST. CONSTRUCTION TO BE REMOVED.
   SEE ARCH'L DWGS FOR LOCATION & EXTENT OF REMOVAL.
2. CONTRACTOR SHALL PROVIDE TEMPORARY SHORING AS NECESSARY TO MAINTAIN STRUCTURAL STABILITY BEFORE REMOVAL. THE TEMPORARY SHORING SHALL NOT BE REMOVED UNTIL PERMANENT STRUCTURE IS IN PLACE.

NOT FOR CONSTRUCTION

GEORGETOWN LIBRARY

3260 R Street,NW
WASHINGTON, DC

Client
DISTRICT OF COLUMBIA PUBLIC LIBRARY
901 G Street, NW
Washington, D.C. 20001

Architect
MARTINEZ & JOHNSON | ARCHITECTURE
1238 Wisconsin Avenue, NW, Suite 302
Washington, D.C. 20007
202.333.4480

Library Architect
HOSHIDE WILLIAMS ARCHITECTS
206.325.6441

Landscape Architect
Lee + Papa and Associates
202.446.6666

Structural Engineer
RESTL DESIGNERS, INC.
301.258.0093

MEP Engineer
JOHN J. CHRISTIE & ASSOCIATES, P.C
202.364.4410

THESE DRAWINGS, SPECIFICATIONS, AND OTHER DOCUMENTS, (COLLECTIVELY, THE "DOCUMENTS") INCLUDING WITHOUT LIMITATION ELECTRONIC VERSIONS THEREOF AND THE IDEAS, DESIGNS, AND ARRANGEMENTS REPRESENTED THEREBY, ARE AND SHALL REMAIN THE PROPERTY OF MARTINEZ & JOHNSON ARCHITECTURE PC, AS DEFINED BY APPLICABLE CONTRACTUAL AGREEMENTS ("THE AGREEMENTS") AND AS PROTECTED BY THE COPYRIGHT STATUTES OF THE UNITED STATES. USE OF THE DOCUMENTS SHALL BE STRICTLY LIMITED TO THE PROJECT FOR WHICH THEY WERE PREPARED AND DEVELOPED ("THE PROJECT") PER THE TERMS OF THE AGREEMENTS. NO PART OF THE DOCUMENTS SHALL BE COPIED, DISCLOSED TO OTHERS, OR USED IN CONNECTION WITH ANY OTHER WORK OR PROJECT, OR BY ANY OTHER PERSONS FOR ANY PURPOSES, OTHER THAN THE COMPLETION OF THE PROJECT, WITHOUT THE SPECIFIC WRITTEN AUTHORIZATION OF MARTINEZ & JOHNSON ARCHITECTURE PC. THE DOWNLOADING, OPENING, OR VIEWING OF ELECTRONIC VERSIONS OF THE DOCUMENTS OR VISUAL CONTACT WITH ANY PRINTED FORM THEREOF SHALL CONSTITUTE CONCLUSIVE EVIDENCE OF ACCEPTANCE OF THESE RESTRICTIONS.

MJ/A Project No.7590

DATE:	DESCRIPTION:
09.01.08	DESIGN DEVELOPMENT
12.19.08	PERMIT SET
01.26.09	PERMIT SET

SHEET TITLE:

MEZZANINE FLOOR DEMOLITION PLAN

S2.1MD

© 2008 MJ/A

RESTL Designers Inc.- S:\GNLR\DRAWINGS\STRUCT\CURRENT\S2.1MD.dwg
[S2.1MD] 01/23/09 - 4:39pm BChang

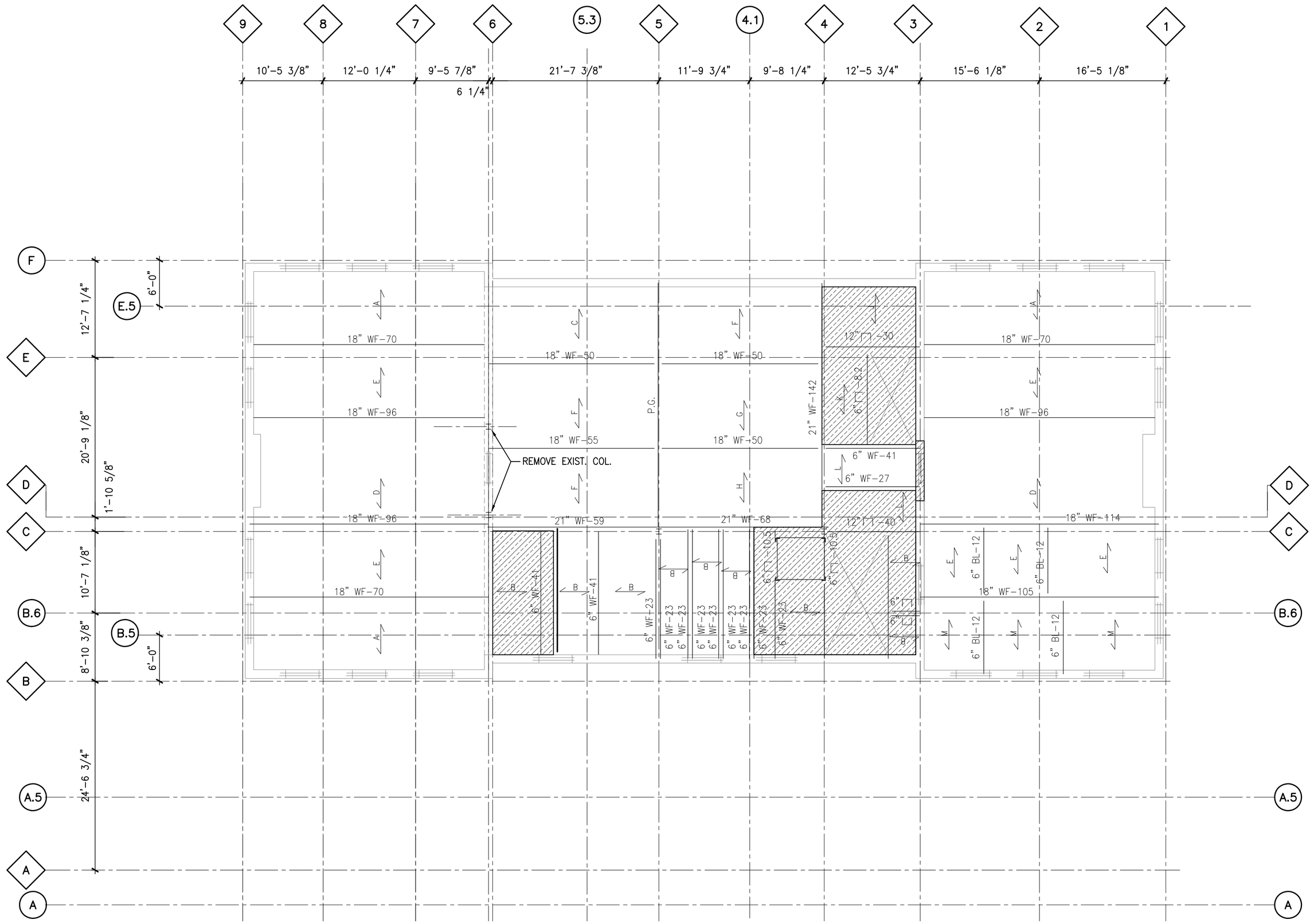

NOTES:

1. ▨ : INDICATE EXIST. CONSTRUCTION TO BE REMOVED.
   SEE ARCH'L DWGS FOR LOCATION & EXTENT OF REMOVAL.
2. CONTRACTOR SHALL PROVIDE TEMPORARY SHORING AS NECESSARY TO MAINTAIN STRUCTURAL STABILITY BEFORE REMOVAL. THE TEMPORARY SHORING SHALL NOT BE REMOVED UNTIL PERMANENT STRUCTURE IS IN PLACE.
3. FRAMING MUST BE INSTALLED BEFORE DEMOLITION (SEE FRAMING PLAN), OR PROVIDE TEMPORARY SHORING BEFORE DEMOLITION AND KEEP SHORING UNTIL FINAL FRAMING IS INSTALLED.

SECOND FLOOR DEMOLITION PLAN

SCALE: 1/8"=1'-0"

Plan North

NOT FOR CONSTRUCTION

GEORGETOWN LIBRARY

3260 R Street,NW
WASHINGTON, DC

Client
DISTRICT OF COLUMBIA PUBLIC LIBRARY
901 G Street, NW
Washington, D.C. 20001

Architect
MARTINEZ & JOHNSON | ARCHITECTURE
1238 Wisconsin Avenue, NW, Suite 302
Washington, D.C. 20007
202.333.4480

Library Architect
HOSHIDE WILLIAMS ARCHITECTS
206.325.6441

Landscape Architect
Lee + Papa and Associates
202.446.6666

Structural Engineer
RESTL DESIGNERS, INC.
301.258.0093

MEP Engineer
JOHN J. CHRISTIE & ASSOCIATES, P.C
202.364.4410

THESE DRAWINGS, SPECIFICATIONS, AND OTHER DOCUMENTS, (COLLECTIVELY, THE "DOCUMENTS") INCLUDING WITHOUT LIMITATION ELECTRONIC VERSIONS THEREOF AND THE IDEAS, DESIGNS, AND ARRANGEMENTS REPRESENTED THEREBY, ARE AND SHALL REMAIN THE PROPERTY OF MARTINEZ & JOHNSON ARCHITECTURE PC, AS DEFINED BY APPLICABLE CONTRACTUAL AGREEMENTS ("THE AGREEMENTS") AND AS PROTECTED BY THE COPYRIGHT STATUTES OF THE UNITED STATES. USE OF THE DOCUMENTS SHALL BE STRICTLY LIMITED TO THE PROJECT FOR WHICH THEY WERE PREPARED AND DEVELOPED ("THE PROJECT") PER THE TERMS OF THE AGREEMENTS. NO PART OF THE DOCUMENTS SHALL BE COPIED, DISCLOSED TO OTHERS, OR USED IN CONNECTION WITH ANY OTHER WORK OR PROJECT, OR BY ANY OTHER PERSONS FOR ANY PURPOSES, OTHER THAN THE COMPLETION OF THE PROJECT, WITHOUT THE SPECIFIC WRITTEN AUTHORIZATION OF MARTINEZ & JOHNSON ARCHITECTURE PC. THE DOWNLOADING, OPENING, OR VIEWING OF ELECTRONIC VERSIONS OF THE DOCUMENTS OR VISUAL CONTACT WITH ANY PRINTED FORM THEREOF SHALL CONSTITUTE CONCLUSIVE EVIDENCE OF ACCEPTANCE OF THESE RESTRICTIONS.

MJ/A Project No.7590

DATE:	DESCRIPTION:
12.19.08	PERMIT SET
01.26.09	PERMIT SET

SHEET TITLE:

SECOND FLOOR DEMOLITION PLAN

S2.2D

© 2008 MJ/A

RESTL Designers Inc.- S:\GNLR\DRAWINGS\STRUCT\CURRENT\S2.2D.dwg
[S2.2D] 01/23/09 - 4:40pm BChang

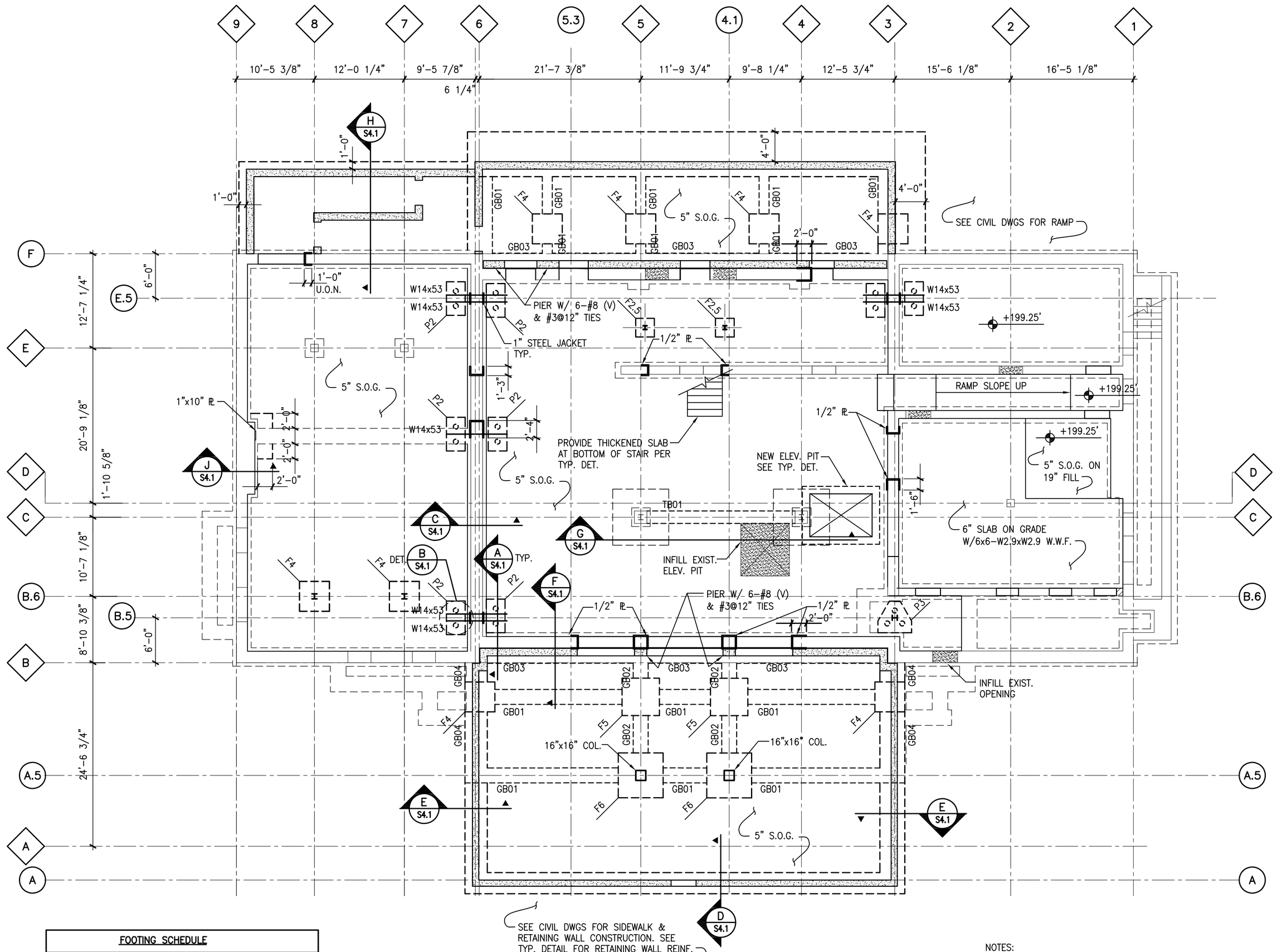

LOWER LEVEL FRAMING PLAN

SCALE: 1/8"=1'-0"

FOOTING SCHEDULE		
MARK	SIZE (WxDxH)	REINFORCEMENT
F4	4'-0"x4'-0"x2'-6"	6#6 EA WAY HOOKED
F5	5'-0"x5'-0"x2'-6"	8#6 EA WAY HOOKED
F6	6'-0"x6'-0"x2'-6"	10#6 EA WAY HOOKED

NOTES:

1. ▨ : INFILL EXIST. WALL OPENING WITH MASONRY
2. SLAB ON GRADE SHALL BE 5" THICK CONCRETE REINFORCED WITH 6x6-W2.9xW2.9 W.W.F. U.O.N.
3. FINISH FLOOR ELEV. IS AT +197.75' U.O.N. ON PLAN
4. COLUMN (16"x16") SHALL BE REINFORED WITH 8-#8 AND #3@12" O.C. TIES
5. ALL PLATES SHALL BE ASTM A992, Fy=50ksi

GRADE BEAM SCHEDULE							
BEAM MARK	WIDTH (IN)	DEPTH (IN)	TOP BAR	BOTTOM BAR	SIDE BAR	STIRRUPS SIZE	STIRRUPS TYPE
GB01	24	24	3#8	3#8	1#8 EA. SIDE	#4@12"	ST-A
GB02	24	24	3#9	3#7		#4@12"	ST-B
GB03	24	24	3#8	3#8		#4@9"	ST-B
GB04	24	24	3#9	3#8	2#8 EA. SIDE	#4@9"	ST-A
TB01	39	24	4#8	4#6		12-#4@6" R.S.	ST-B

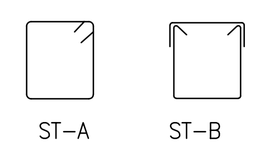

STIRRUP TYPE

SCALE: N.T.S.

Plan North

NOT FOR CONSTRUCTION

GEORGETOWN LIBRARY

3260 R Street,NW
WASHINGTON, DC

Client
DISTRICT OF COLUMBIA PUBLIC LIBRARY
901 G Street, NW
Washington, D.C. 20001

Architect
MARTINEZ & JOHNSON | ARCHITECTURE
1238 Wisconsin Avenue, NW, Suite 302
Washington, D.C. 20007
202.333.4480

Library Architect
HOSHIDE WILLIAMS ARCHITECTS
206.325.6441

Landscape Architect
Lee + Papa and Associates
202.446.6666

Structural Engineer
RESTL DESIGNERS, INC.
301.258.0093

MEP Engineer
JOHN J. CHRISTIE & ASSOCIATES, P.C
202.364.4410

THESE DRAWINGS, SPECIFICATIONS, AND OTHER DOCUMENTS, (COLLECTIVELY, THE "DOCUMENTS") INCLUDING WITHOUT LIMITATION ELECTRONIC VERSIONS THEREOF AND THE IDEAS, DESIGNS, AND ARRANGEMENTS REPRESENTED THEREBY, ARE AND SHALL REMAIN THE PROPERTY OF MARTINEZ & JOHNSON ARCHITECTURE PC, AS DEFINED BY APPLICABLE CONTRACTUAL AGREEMENTS ("THE AGREEMENTS") AND AS PROTECTED BY THE COPYRIGHT STATUTES OF THE UNITED STATES. USE OF THE DOCUMENTS SHALL BE STRICTLY LIMITED TO THE PROJECT FOR WHICH THEY WERE PREPARED AND DEVELOPED ("THE PROJECT") PER THE TERMS OF THE AGREEMENTS. NO PART OF THE DOCUMENTS SHALL BE COPIED, DISCLOSED TO OTHERS, OR USED IN CONNECTION WITH ANY OTHER WORK OR PROJECT, OR BY ANY OTHER PERSONS FOR ANY PURPOSES, OTHER THAN THE COMPLETION OF THE PROJECT, WITHOUT THE SPECIFIC WRITTEN AUTHORIZATION OF MARTINEZ & JOHNSON ARCHITECTURE PC. THE DOWNLOADING, OPENING, OR VIEWING OF ELECTRONIC VERSIONS OF THE DOCUMENTS OR VISUAL CONTACT WITH ANY PRINTED FORM THEREOF SHALL CONSTITUTE CONCLUSIVE EVIDENCE OF ACCEPTANCE OF THESE RESTRICTIONS.

MJ/A Project No.7590

DATE:	DESCRIPTION:
09.01.08	DESIGN DEVELOPMENT
12.19.08	PERMIT SET
01.26.09	PERMIT SET

SHEET TITLE:

LOWER LEVEL FRAMING PLAN

S2.0

© 2008 MJ/A

RESTL Designers Inc.- S:\GNLR\DRAWINGS\STRUCT\CURRENT\S2.0.dwg
[S2.0] 01/23/09 - 4:38pm BChang

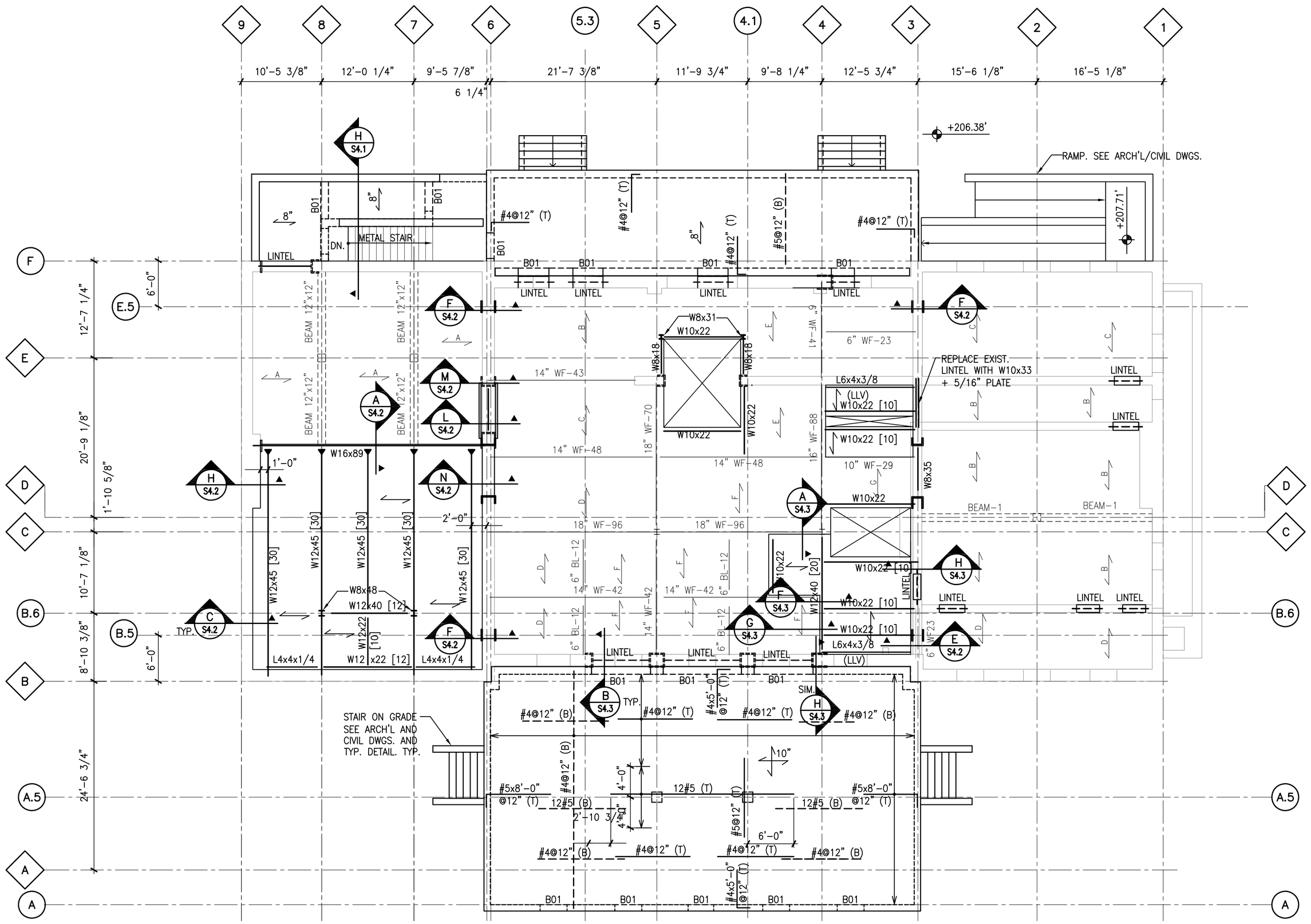

FIRST FLOOR FRAMING PLAN

SCALE: 1/8"=1'-0"

BEAM SCHEDULE							
BEAM MARK	WIDTH (IN)	DEPTH (IN)	TOP BAR	BOTTOM BAR	SIDE BAR	STIRRUPS SIZE	STIRRUPS TYPE
B01	10	16	2-#7	2-#7		#4@12"	

NOTES:

1. INDICATES 3 1/4" L.W. CONC. ON 3"-18 GA METAL DECK [GALV.] STUDS SHALL BE 3/4"ø x 4 1/2"
2. 8" INDICATES 8" N.W. CONC. ONE-WAY SLAB.
3. 10" INDICATES 10" N.W. CONC. TWO-WAY SLAB.
4. THE FINISH FLOOR IS AT +209.71'.
5. ▶ DENOTES FULL MOMENT CONNECTION.
6. DESIGN SHEAR CONNECTIONS FOR MIN. 20 kips, IF REACTIONS ARE NOT SHOWN.

Plan North

NOT FOR CONSTRUCTION

GEORGETOWN LIBRARY

3260 R Street,NW
WASHINGTON, DC

Client
DISTRICT OF COLUMBIA PUBLIC LIBRARY
901 G Street, NW
Washington, D.C. 20001

Architect
MARTINEZ & JOHNSON | ARCHITECTURE
1238 Wisconsin Avenue, NW, Suite 302
Washington, D.C. 20007
202.333.4480

Library Architect
HOSHIDE WILLIAMS ARCHITECTS
206.325.6441

Landscape Architect
Lee + Papa and Associates
202.446.6666

Structural Engineer
RESTL DESIGNERS, INC.
301.258.0093

MEP Engineer
JOHN J. CHRISTIE & ASSOCIATES, P.C
202.364.4410

THESE DRAWINGS, SPECIFICATIONS, AND OTHER DOCUMENTS, (COLLECTIVELY, THE "DOCUMENTS") INCLUDING WITHOUT LIMITATION ELECTRONIC VERSIONS THEREOF AND THE IDEAS, DESIGNS, AND ARRANGEMENTS REPRESENTED THEREBY, ARE AND SHALL REMAIN THE PROPERTY OF MARTINEZ & JOHNSON ARCHITECTURE PC, AS DEFINED BY APPLICABLE CONTRACTUAL AGREEMENTS ("THE AGREEMENTS") AND AS PROTECTED BY THE COPYRIGHT STATUTES OF THE UNITED STATES. USE OF THE DOCUMENTS SHALL BE STRICTLY LIMITED TO THE PROJECT FOR WHICH THEY WERE PREPARED AND DEVELOPED ("THE PROJECT") PER THE TERMS OF THE AGREEMENTS. NO PART OF THE DOCUMENTS SHALL BE COPIED, DISCLOSED TO OTHERS, OR USED IN CONNECTION WITH ANY OTHER WORK OR PROJECT, OR BY ANY OTHER PERSONS FOR ANY PURPOSES, OTHER THAN THE COMPLETION OF THE PROJECT, WITHOUT THE SPECIFIC WRITTEN AUTHORIZATION OF MARTINEZ & JOHNSON ARCHITECTURE PC. THE DOWNLOADING, OPENING, OR VIEWING OF ELECTRONIC VERSIONS OF THE DOCUMENTS OR VISUAL CONTACT WITH ANY PRINTED FORM THEREOF SHALL CONSTITUTE CONCLUSIVE EVIDENCE OF ACCEPTANCE OF THESE RESTRICTIONS.

MJ/A Project No.7590

DATE:	DESCRIPTION:
09.01.08	DESIGN DEVELOPMENT
12.19.08	PERMIT SET
01.26.09	PERMIT SET

SHEET TITLE:

FIRST FLOOR FRAMING PLAN

S2.1

© 2008 MJ/A

RESTL Designers Inc.- S:\GNLR\DRAWINGS\STRUCT\CURRENT\S2.1.dwg
[S2.1] 01/23/09 - 4:38pm BChang

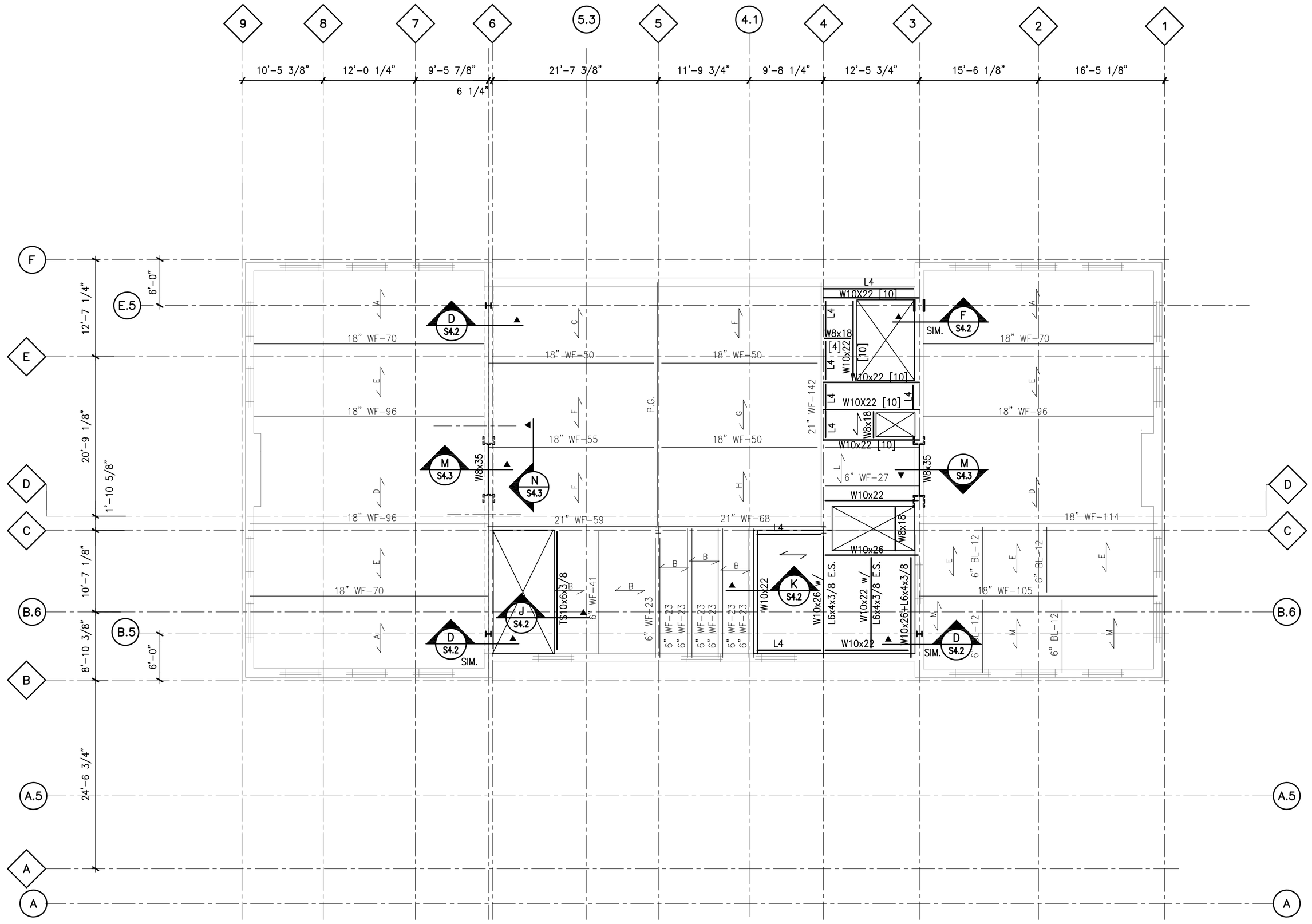

NOTES:

1. ⟷ : INDICATES 3 1/4" L.W. CONC. ON 3"-18 GA METAL DECK (GALV.)
   STUDS SHALL BE 3/4"ø x 4 1/2"
2. L4 : INDICATES L4x4x1/4 METAL DECK EDGE SUPPORT
3. DESIGN SHEAR CONNECTIONS FOR MIN. 20 kips, IF REACTIONS ARE NOT SHOWN.

SECOND FLOOR FRAMING PLAN

SCALE: 1/8"=1'-0"

Plan North

NOT FOR CONSTRUCTION

GEORGETOWN LIBRARY

3260 R Street,NW
WASHINGTON, DC

Client
DISTRICT OF COLUMBIA PUBLIC LIBRARY
901 G Street, NW
Washington, D.C. 20001

Architect
MARTINEZ & JOHNSON | ARCHITECTURE
1238 Wisconsin Avenue, NW, Suite 302
Washington, D.C. 20007
202.333.4480

Library Architect
HOSHIDE WILLIAMS ARCHITECTS
206.325.6441

Landscape Architect
Lee + Papa and Associates
202.446.6666

Structural Engineer
RESTL DESIGNERS, INC.
301.258.0093

MEP Engineer
JOHN J. CHRISTIE & ASSOCIATES, P.C
202.364.4410

THESE DRAWINGS, SPECIFICATIONS, AND OTHER DOCUMENTS, (COLLECTIVELY, THE "DOCUMENTS") INCLUDING WITHOUT LIMITATION ELECTRONIC VERSIONS THEREOF AND THE IDEAS, DESIGNS, AND ARRANGEMENTS REPRESENTED THEREBY, ARE AND SHALL REMAIN THE PROPERTY OF MARTINEZ & JOHNSON ARCHITECTURE PC, AS DEFINED BY APPLICABLE CONTRACTUAL AGREEMENTS ("THE AGREEMENTS") AND AS PROTECTED BY THE COPYRIGHT STATUTES OF THE UNITED STATES. USE OF THE DOCUMENTS SHALL BE STRICTLY LIMITED TO THE PROJECT FOR WHICH THEY WERE PREPARED AND DEVELOPED ("THE PROJECT") PER THE TERMS OF THE AGREEMENTS. NO PART OF THE DOCUMENTS SHALL BE COPIED, DISCLOSED TO OTHERS, OR USED IN CONNECTION WITH ANY OTHER WORK OR PROJECT, OR BY ANY OTHER PERSONS FOR ANY PURPOSES, OTHER THAN THE COMPLETION OF THE PROJECT, WITHOUT THE SPECIFIC WRITTEN AUTHORIZATION OF MARTINEZ & JOHNSON ARCHITECTURE PC. THE DOWNLOADING, OPENING, OR VIEWING OF ELECTRONIC VERSIONS OF THE DOCUMENTS OR VISUAL CONTACT WITH ANY PRINTED FORM THEREOF SHALL CONSTITUTE CONCLUSIVE EVIDENCE OF ACCEPTANCE OF THESE RESTRICTIONS.

MJ/A Project No.7590

DATE:	DESCRIPTION:
09.01.08	DESIGN DEVELOPMENT
12.19.08	PERMIT SET
01.26.09	PERMIT SET

SHEET TITLE:

SECOND FLOOR FRAMING PLAN

S2.2

© 2008 MJ/A

RESTL Designers Inc.- S:\GNLR\DRAWINGS\STRUCT\CURRENT\S2.2.dwg
[S2.2] 01/23/09 - 4:39pm BChang

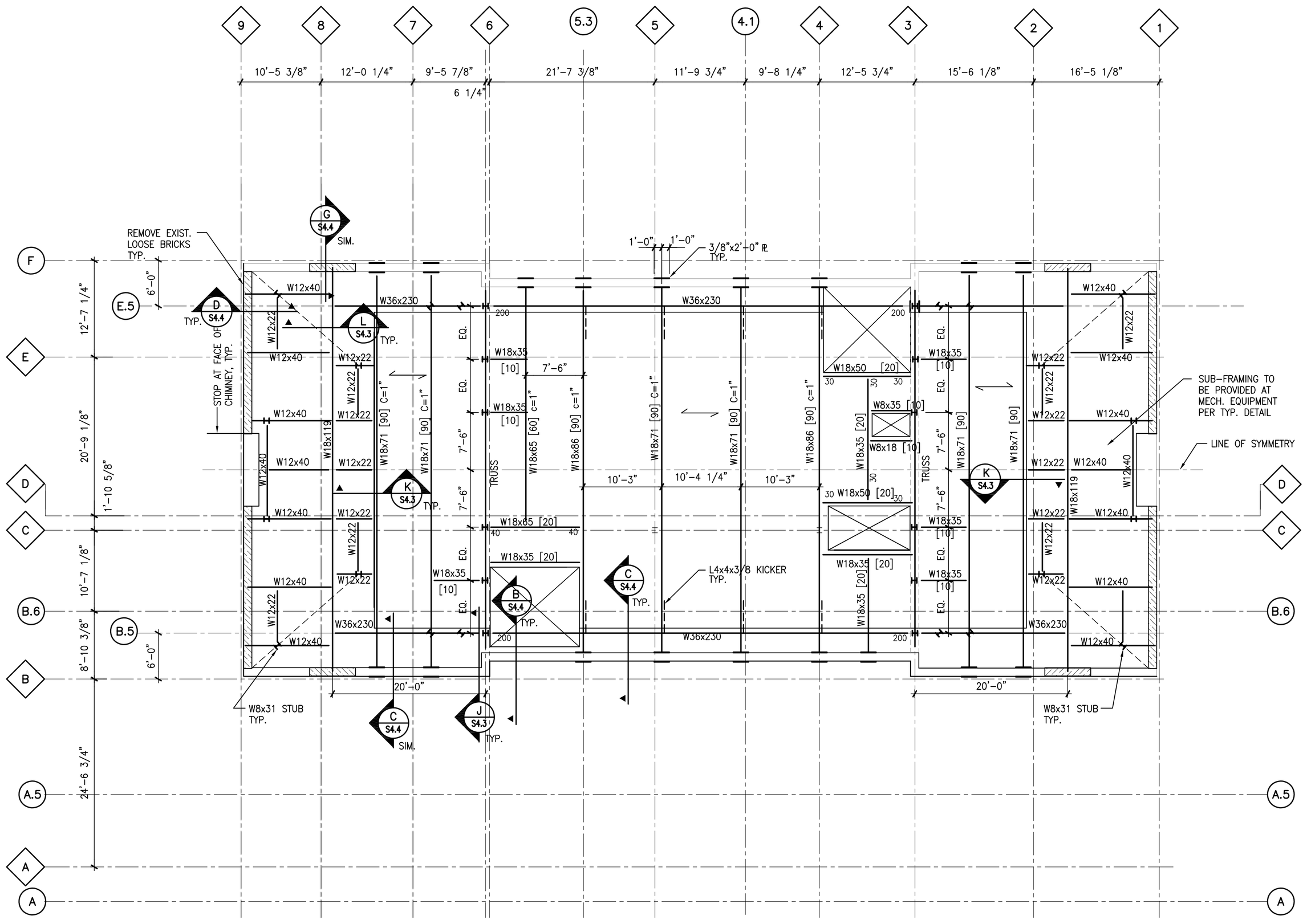

NOTES:

1. ⟷ INDICATES 3 1/4" L.W. CONC. ON 3"-18 GA METAL DECK (GALV.)
   STUDS SHALL BE 3/4"ø x 4 1/2"
2. DESIGN SHEAR CONNECTIONS FOR MIN. 20 kips, IF REACTIONS ARE NOT SHOWN.

THIRD FLOOR FRAMING PLAN

SCALE: 1/8"=1'-0"

Plan North

NOT FOR CONSTRUCTION

GEORGETOWN LIBRARY

3260 R Street,NW
WASHINGTON, DC

Client
DISTRICT OF COLUMBIA PUBLIC LIBRARY
901 G Street, NW
Washington, D.C. 20001

Architect
MARTINEZ & JOHNSON | ARCHITECTURE
1238 Wisconsin Avenue, NW, Suite 302
Washington, D.C. 20007
202.333.4480

Library Architect
HOSHIDE WILLIAMS ARCHITECTS
206.325.6441

Landscape Architect
Lee + Papa and Associates
202.446.6666

Structural Engineer
RESTL DESIGNERS, INC.
301.258.0093

MEP Engineer
JOHN J. CHRISTIE & ASSOCIATES, P.C
202.364.4410

THESE DRAWINGS, SPECIFICATIONS, AND OTHER DOCUMENTS, (COLLECTIVELY, THE "DOCUMENTS") INCLUDING WITHOUT LIMITATION ELECTRONIC VERSIONS THEREOF AND THE IDEAS, DESIGNS, AND ARRANGEMENTS REPRESENTED THEREBY, ARE AND SHALL REMAIN THE PROPERTY OF MARTINEZ & JOHNSON ARCHITECTURE PC, AS DEFINED BY APPLICABLE CONTRACTUAL AGREEMENTS ("THE AGREEMENTS") AND AS PROTECTED BY THE COPYRIGHT STATUTES OF THE UNITED STATES. USE OF THE DOCUMENTS SHALL BE STRICTLY LIMITED TO THE PROJECT FOR WHICH THEY WERE PREPARED AND DEVELOPED ("THE PROJECT") PER THE TERMS OF THE AGREEMENTS. NO PART OF THE DOCUMENTS SHALL BE COPIED, DISCLOSED TO OTHERS, OR USED IN CONNECTION WITH ANY OTHER WORK OR PROJECT, OR BY ANY OTHER PERSONS FOR ANY PURPOSES, OTHER THAN THE COMPLETION OF THE PROJECT, WITHOUT THE SPECIFIC WRITTEN AUTHORIZATION OF MARTINEZ & JOHNSON ARCHITECTURE PC. THE DOWNLOADING, OPENING, OR VIEWING OF ELECTRONIC VERSIONS OF THE DOCUMENTS OR VISUAL CONTACT WITH ANY PRINTED FORM THEREOF SHALL CONSTITUTE CONCLUSIVE EVIDENCE OF ACCEPTANCE OF THESE RESTRICTIONS.

MJ/A Project No.7590

DATE:	DESCRIPTION:
09.01.08	DESIGN DEVELOPMENT
12.19.08	PERMIT SET
01.26.09	PERMIT SET

SHEET TITLE:

THIRD FLOOR FRAMING PLAN

S2.3

© 2008 MJ/A

RESTL Designers Inc.- S:\GNLR\DRAWINGS\STRUCT\CURRENT\S2.3.dwg
[S2.3] 01/23/09 - 4:40pm BChang

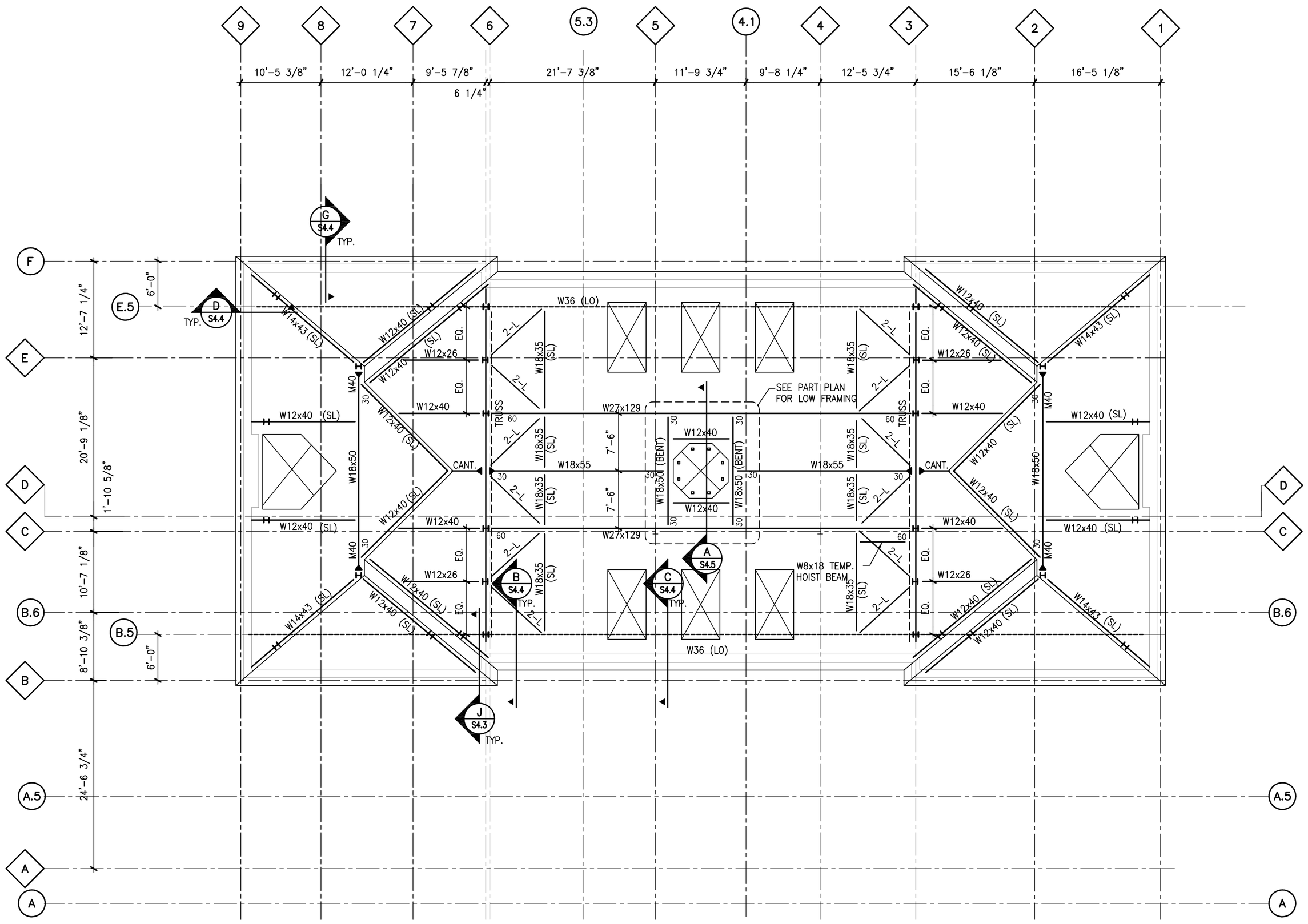

ROOF FRAMING PLAN

SCALE: 1/8"=1'-0"

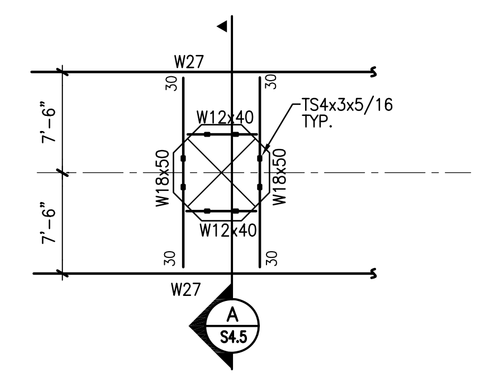

PART FRAMING PLAN

SCALE: 1/8"=1'-0"

NOTES:

1. ▶ DENOTES FULL MOMENT CONNECTION U.O.N. ON PLAN AS M** , WHICH MEANS THE CONNECTION SHALL DEVELOP MOMENT OF** FT-KIP
2. 2-L DENOTES 2L4x4x1/4 (20KIPS)
3. DESIGN SHEAR CONNECTIONS FOR MIN. 20 kips, IF REACTIONS ARE NOT SHOWN.
4. SEE ARCH'L DWGS FOR LIGHT GAGE ROOF FRAMING.

NOT FOR CONSTRUCTION

Plan North

GEORGETOWN LIBRARY

3260 R Street,NW
WASHINGTON, DC

Client
DISTRICT OF COLUMBIA PUBLIC LIBRARY
901 G Street, NW
Washington, D.C. 20001

Architect
MARTINEZ & JOHNSON | ARCHITECTURE
1238 Wisconsin Avenue, NW, Suite 302
Washington, D.C. 20007
202.333.4480

Library Architect
HOSHIDE WILLIAMS ARCHITECTS
206.325.6441

Landscape Architect
Lee + Papa and Associates
202.446.6666

Structural Engineer
RESTL DESIGNERS, INC.
301.258.0093

MEP Engineer
JOHN J. CHRISTIE & ASSOCIATES, P.C
202.364.4410

THESE DRAWINGS, SPECIFICATIONS, AND OTHER DOCUMENTS, (COLLECTIVELY, THE "DOCUMENTS") INCLUDING WITHOUT LIMITATION ELECTRONIC VERSIONS THEREOF AND THE IDEAS, DESIGNS, AND ARRANGEMENTS REPRESENTED THEREBY, ARE AND SHALL REMAIN THE PROPERTY OF MARTINEZ & JOHNSON ARCHITECTURE PC, AS DEFINED BY APPLICABLE CONTRACTUAL AGREEMENTS ("THE AGREEMENTS") AND AS PROTECTED BY THE COPYRIGHT STATUTES OF THE UNITED STATES. USE OF THE DOCUMENTS SHALL BE STRICTLY LIMITED TO THE PROJECT FOR WHICH THEY WERE PREPARED AND DEVELOPED ("THE PROJECT") PER THE TERMS OF THE AGREEMENTS. NO PART OF THE DOCUMENTS SHALL BE COPIED, DISCLOSED TO OTHERS, OR USED IN CONNECTION WITH ANY OTHER WORK OR PROJECT, OR BY ANY OTHER PERSONS FOR ANY PURPOSES, OTHER THAN THE COMPLETION OF THE PROJECT, WITHOUT THE SPECIFIC WRITTEN AUTHORIZATION OF MARTINEZ & JOHNSON ARCHITECTURE PC. THE DOWNLOADING, OPENING, OR VIEWING OF ELECTRONIC VERSIONS OF THE DOCUMENTS OR VISUAL CONTACT WITH ANY PRINTED FORM THEREOF SHALL CONSTITUTE CONCLUSIVE EVIDENCE OF ACCEPTANCE OF THESE RESTRICTIONS.

MJ/A Project No.7590

DATE:	DESCRIPTION:
09.01.08	DESIGN DEVELOPMENT
12.19.08	PERMIT SET
01.26.09	PERMIT SET

SHEET TITLE:

ROOF FRAMING PLAN

S2.4

© 2008 MJ/A

RESTL Designers Inc.- S:\GNLR\DRAWINGS\STRUCT\CURRENT\S2.4.dwg
[S2.4] 01/23/09 - 4:40pm BChang

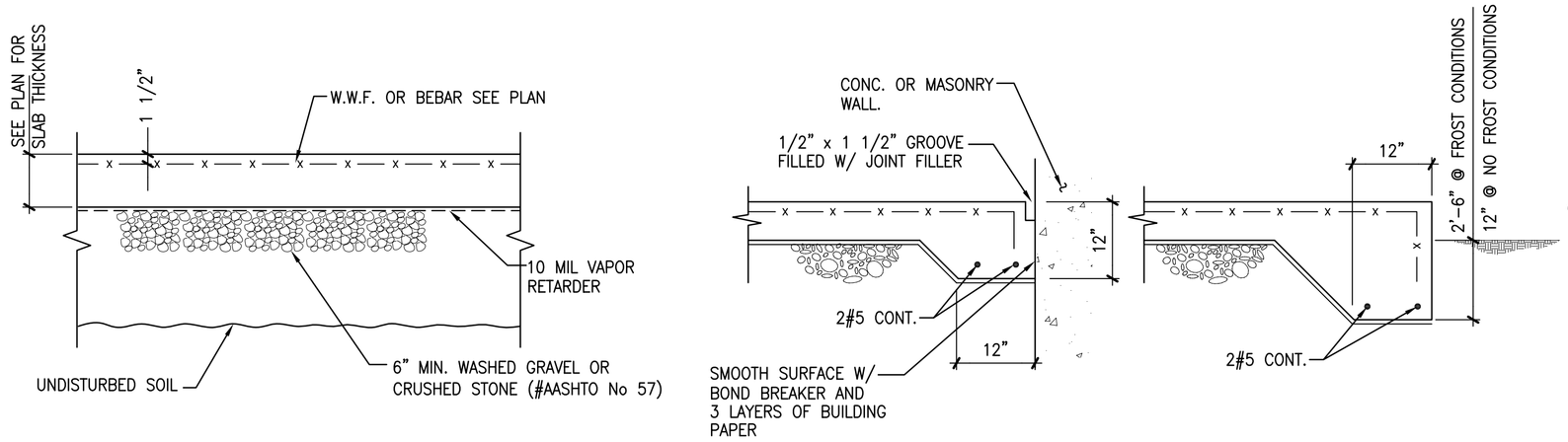

A TYPICAL DETAIL OF SLAB ON GRADE
SCALE: N.T.S.

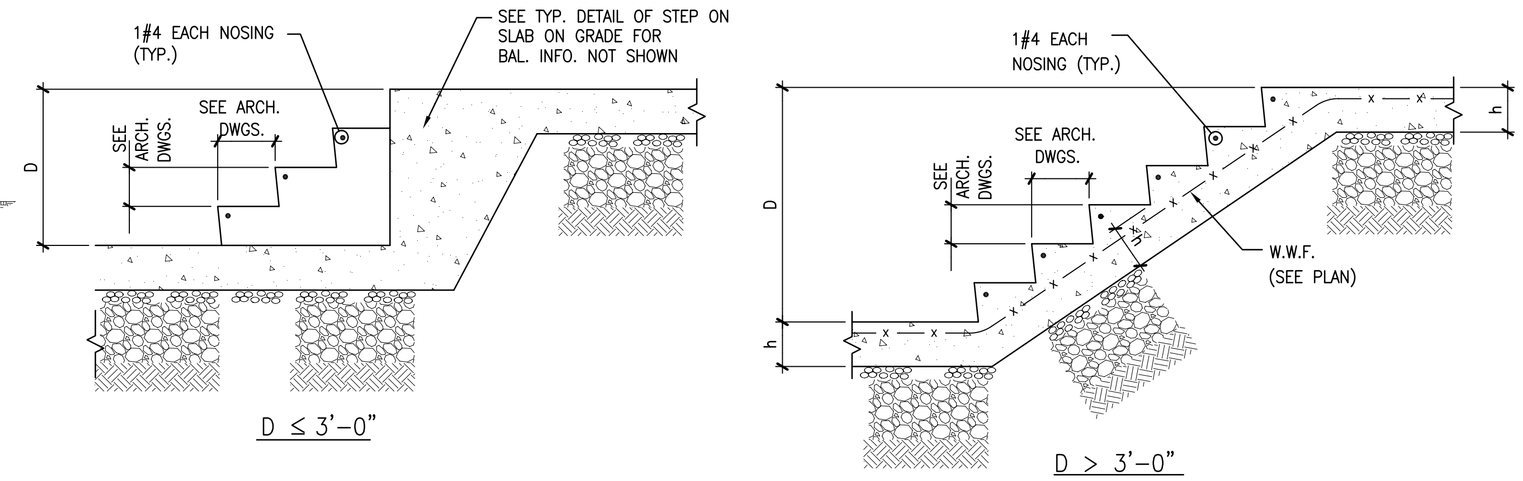

B TYPICAL STAIR DETAIL ON SLAB ON GRADE
SCALE: N.T.S.

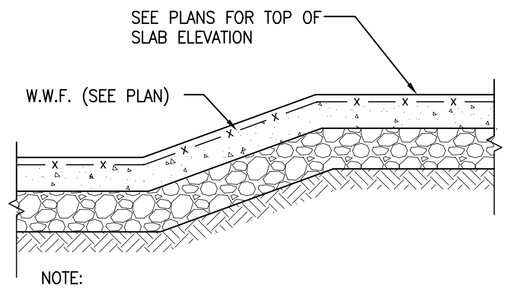

NOTE:
1. FOR INFORMATION NOT SHOWN REFER TO TYPICAL DETAIL OF SLAB ON GRADE.

C TYPICAL DETAIL OF SLOPED SLAB ON GRADE
SCALE: N.T.S.

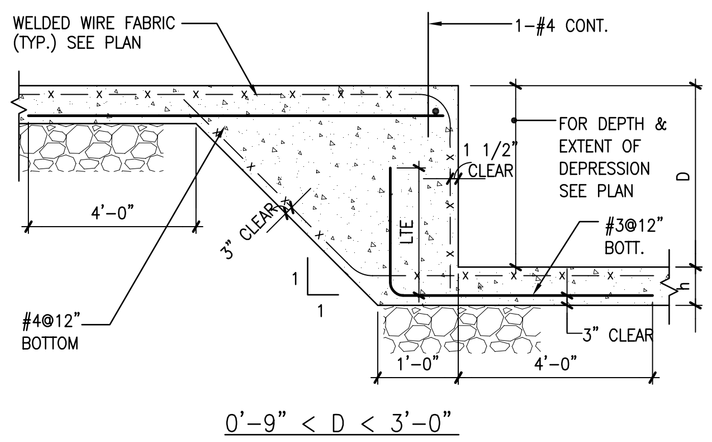

D TYPICAL DETAIL OF STEP ON SLAB ON GRADE
SCALE: N.T.S.

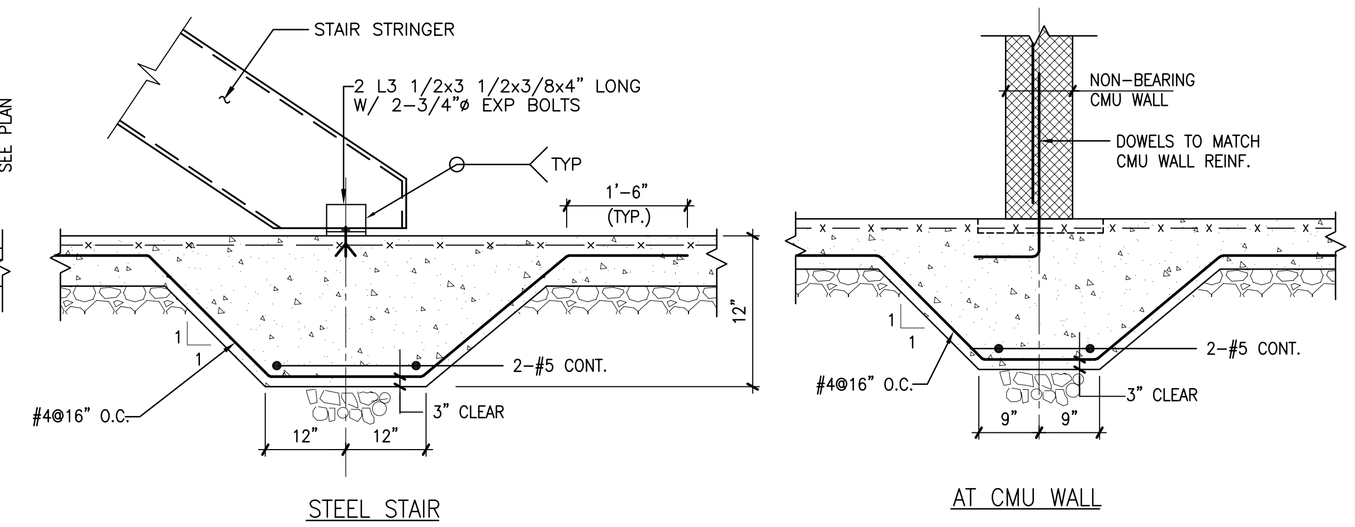

E TYPICAL DETAIL AT THICKENED SLAB ON GRADE
SCALE: N.T.S.

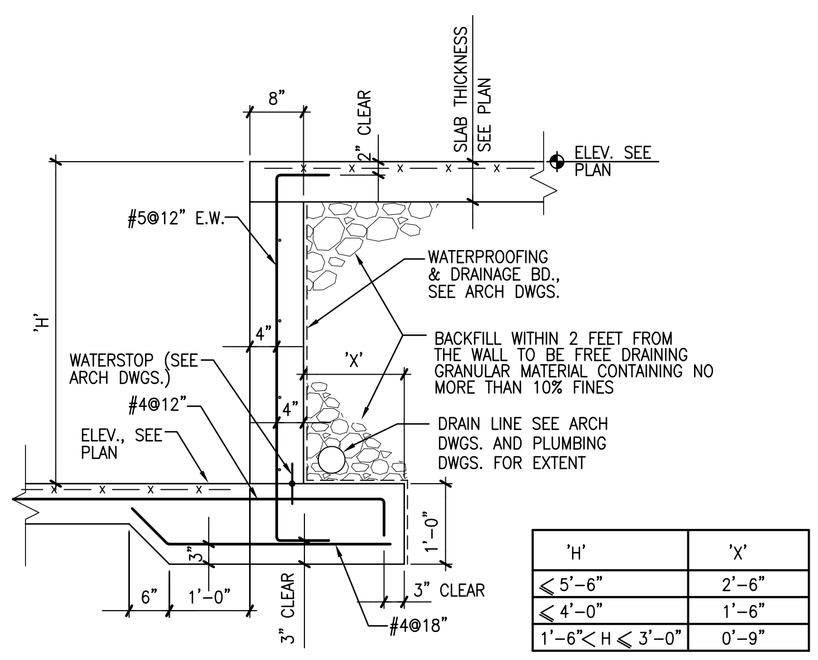

'H'	'X'
≤ 5'-6"	2'-6"
≤ 4'-0"	1'-6"
1'-6" < H ≤ 3'-0"	0'-9"

F SMALL HEIGHT RETAINING WALL @ S.O.G.
SCALE: N.T.S.

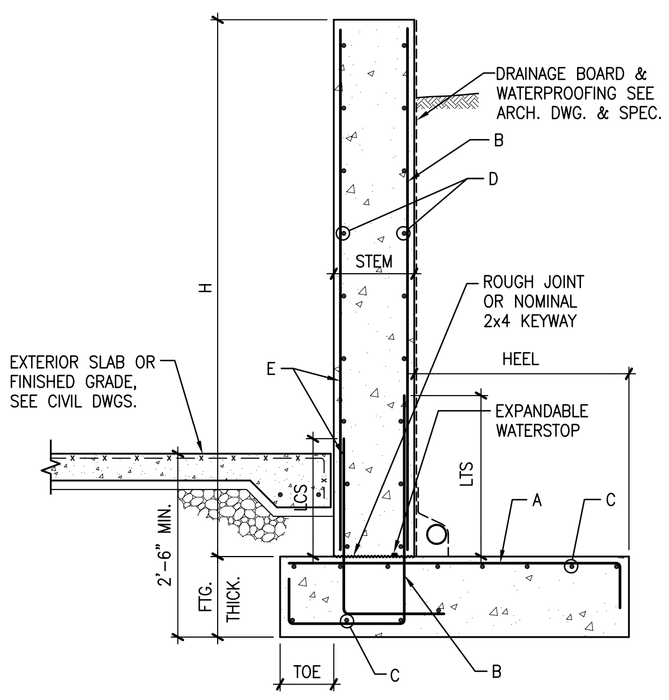

RETAINING WALL SCHEDULE					
TYPE	HEIGHT (H) (ft)	STEM THICK (in)	FTG. THICK (in)	TOE (ft)	HEEL (ft)
H1	5'-6" ≤ H<10'	10	15	2	7.5
H2	10' ≤ H<14'	14	18	2	10

RETAINING WALL SCHEDULE					
TYPE	A	B	C	D	E
H1	#7 @ 12"	#7 @ 12"	#4 @ 9"	#4 @ 12"	#4 @ 12"
H2	#7 @6"	#7 @ 8"	#6 @ 12"	#4 @ 12"	#4 @ 8"

G TYP. RETAINING WALL
SCALE: N.T.S.

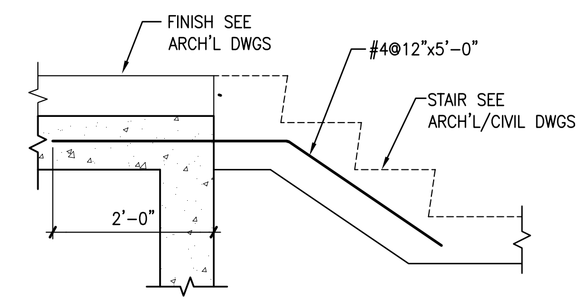

H TYP. STAIR FRAMING INTO CONCRETE FRAMING DETAIL
SCALE: N.T.S.

NOT FOR CONSTRUCTION

GEORGETOWN LIBRARY

3260 R Street,NW
WASHINGTON, DC

Client
DISTRICT OF COLUMBIA PUBLIC LIBRARY
901 G Street, NW
Washington, D.C. 20001

Architect
MARTINEZ & JOHNSON | ARCHITECTURE
1238 Wisconsin Avenue, NW, Suite 302
Washington, D.C. 20007
202.333.4480

Library Architect
HOSHIDE WILLIAMS ARCHITECTS
206.325.6441

Landscape Architect
Lee + Papa and Associates
202.446.6666

Structural Engineer
RESTL DESIGNERS, INC.
301.258.0093

MEP Engineer
JOHN J. CHRISTIE & ASSOCIATES, P.C
202.364.4410

THESE DRAWINGS, SPECIFICATIONS, AND OTHER DOCUMENTS, (COLLECTIVELY, THE "DOCUMENTS") INCLUDING WITHOUT LIMITATION ELECTRONIC VERSIONS THEREOF AND THE IDEAS, DESIGNS, AND ARRANGEMENTS REPRESENTED THEREBY, ARE AND SHALL REMAIN THE PROPERTY OF MARTINEZ & JOHNSON ARCHITECTURE PC, AS DEFINED BY APPLICABLE CONTRACTUAL AGREEMENTS ("THE AGREEMENTS") AND AS PROTECTED BY THE COPYRIGHT STATUTES OF THE UNITED STATES. USE OF THE DOCUMENTS SHALL BE STRICTLY LIMITED TO THE PROJECT FOR WHICH THEY WERE PREPARED AND DEVELOPED ("THE PROJECT") PER THE TERMS OF THE AGREEMENTS. NO PART OF THE DOCUMENTS SHALL BE COPIED, DISCLOSED TO OTHERS, OR USED IN CONNECTION WITH ANY OTHER WORK OR PROJECT, OR BY ANY OTHER PERSONS FOR ANY PURPOSES, OTHER THAN THE COMPLETION OF THE PROJECT, WITHOUT THE SPECIFIC WRITTEN AUTHORIZATION OF MARTINEZ & JOHNSON ARCHITECTURE PC. THE DOWNLOADING, OPENING, OR VIEWING OF ELECTRONIC VERSIONS OF THE DOCUMENTS OR VISUAL CONTACT WITH ANY PRINTED FORM THEREOF SHALL CONSTITUTE CONCLUSIVE EVIDENCE OF ACCEPTANCE OF THESE RESTRICTIONS.

MJ/A Project No.7590

DATE:	DESCRIPTION:
09.01.08	DESIGN DEVELOPMENT
12.19.08	PERMIT SET
01.26.09	PERMIT SET

SHEET TITLE:
TYPICAL DETAILS

S3.1

© 2008 MJ/A

RESTL Designers Inc.- S:\GNLR\DRAWINGS\STRUCT\CURRENT\S3.1.dwg
[S3.1] 01/23/09 - 4:41pm BChang

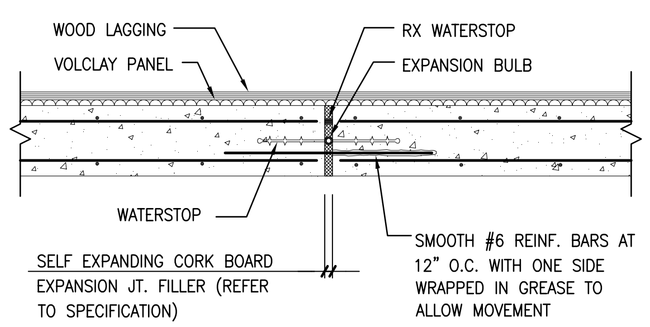

IN FOUNDATION WALL

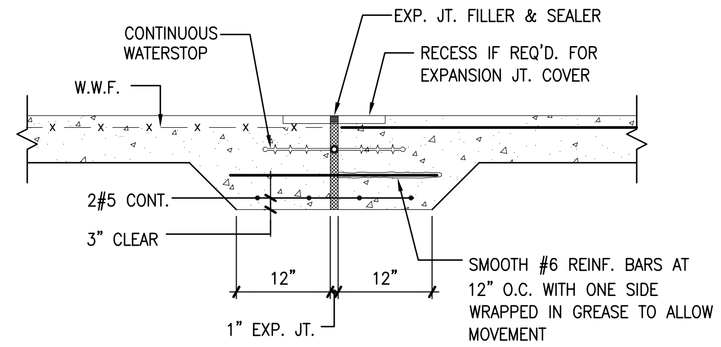

AT SLAB ON GRADE

A TYPICAL EXPANSION JOINT DETAILS
SCALE: N.T.S.

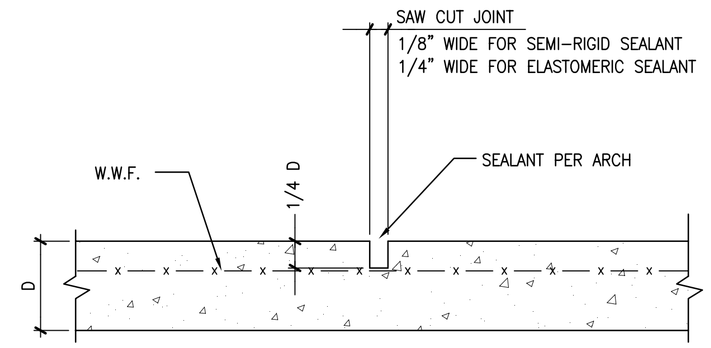

NOTES:

1. REFER TO SPECIFICATION FOR PROCEDURE & TIMING OF JOINT CUTTING.
2. PROVIDE JOINT LAYOUT SUBMITTAL FOR REVIEW & APPROVAL

B TYPICAL CONTROL JOINT ON SLAB ON GRADE
SCALE: N.T.S.

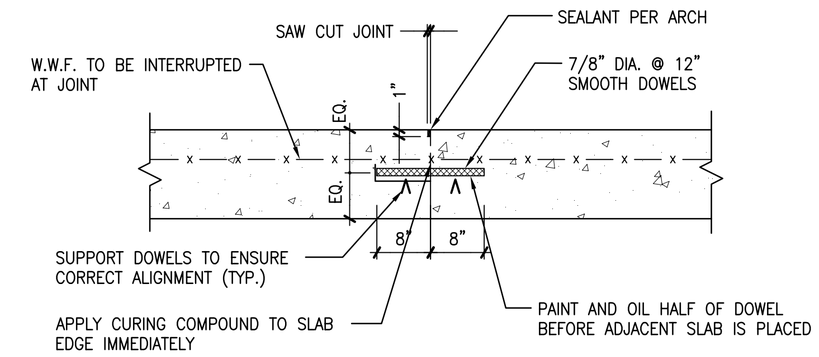

NOTES:

1. FOR INFORMATION NOT SHOWN REFER TO TYPICAL DETAIL OF SLAB ON GRADE.

C TYPICAL CONSTRUCTION JOINT ON SLAB ON GRADE
SCALE: N.T.S.

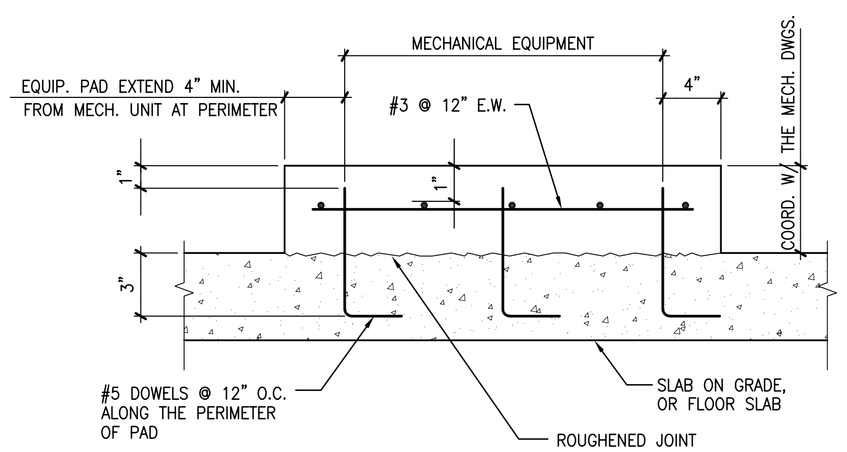

D TYP. MECH. EQUIP. PAD DETAIL
SCALE: N.T.S.

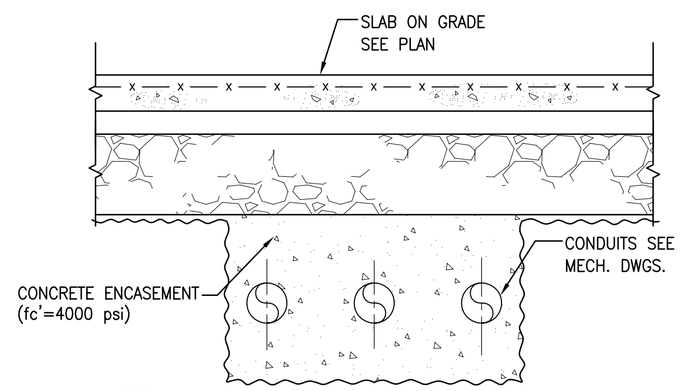

NOTES:

1. FOR PLACEMENT OF CONDUITS SEE MECH. DWGS. DIMENSIONS FOR TRENCH TO BE COORDINATED WITH MECH. CONTRACTOR.
2. REFER TO TYPICAL DETAIL OF SLAB ON GRADE FORINFORMATION NOT SHOWN.

E TYPICAL SECTION AT CONDUIT BELOW GRADE
SCALE: N.T.S.

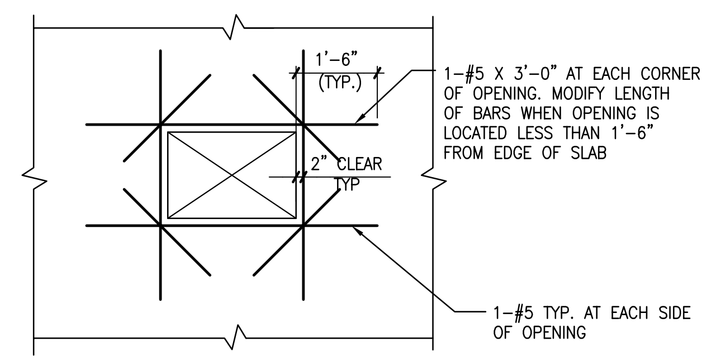

NOTE:

FOR SIZE OF OPENINGS SEE ARCHITECTURAL DRAWINGS.

F TYPICAL DETAIL OF ADDITIONAL REINF. AT OPENINGS IN SLAB ON GRADE
SCALE: N.T.S.

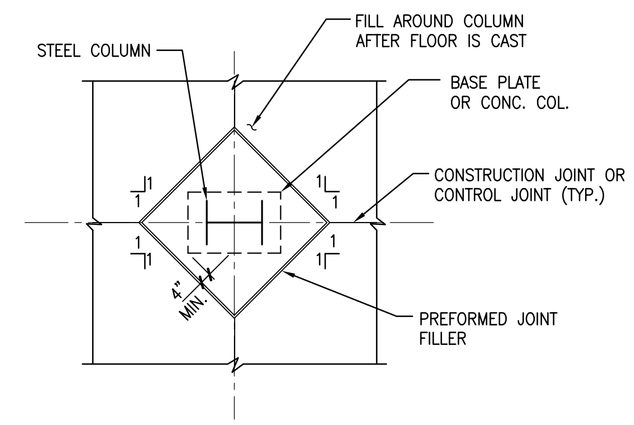

G TYPICAL ISOLATION JOINT AT STEEL/CONCRETE COLUMN
SCALE: N.T.S.

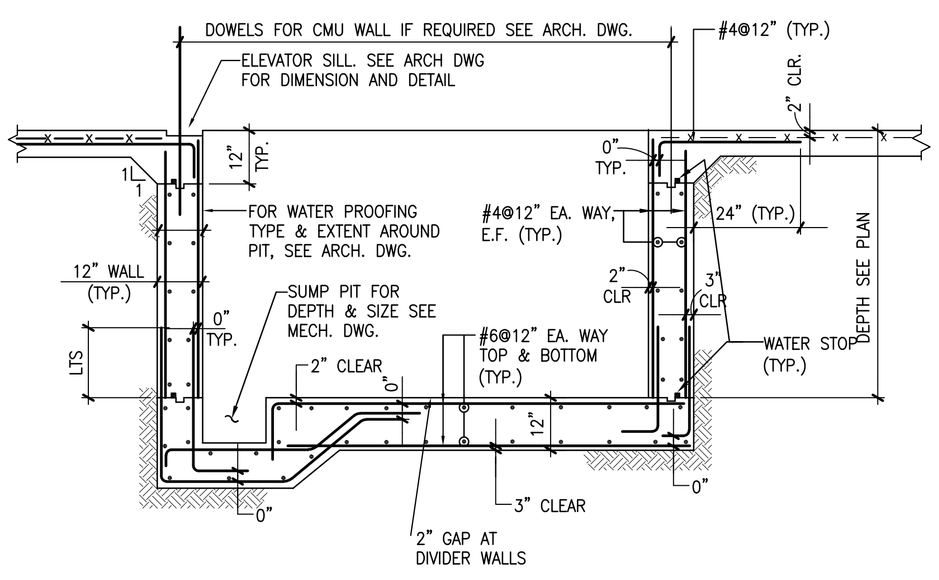

H TYPICAL DETAIL OF ELEVATOR PIT
SCALE: N.T.S.

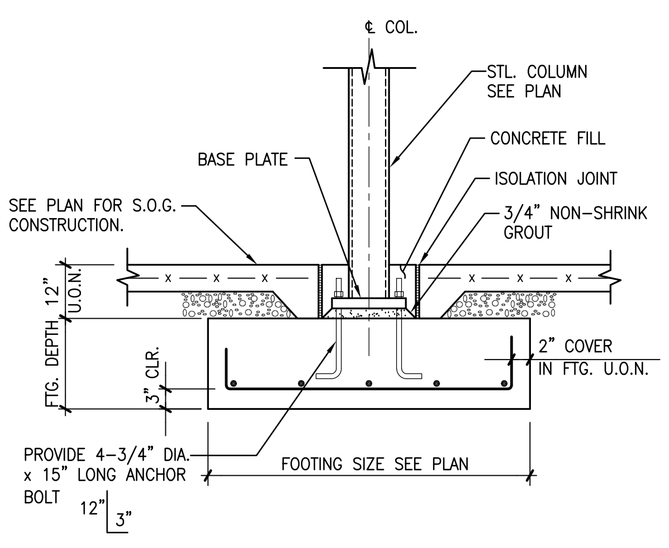

J TYPICAL FOOTING DETAIL FOR STEEL COLUMN
SCALE: N.T.S.

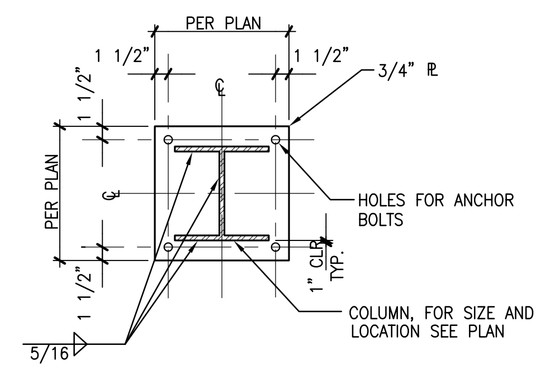

K TYPICAL COLUMN BASE PLATE DETAIL
SCALE: N.T.S.

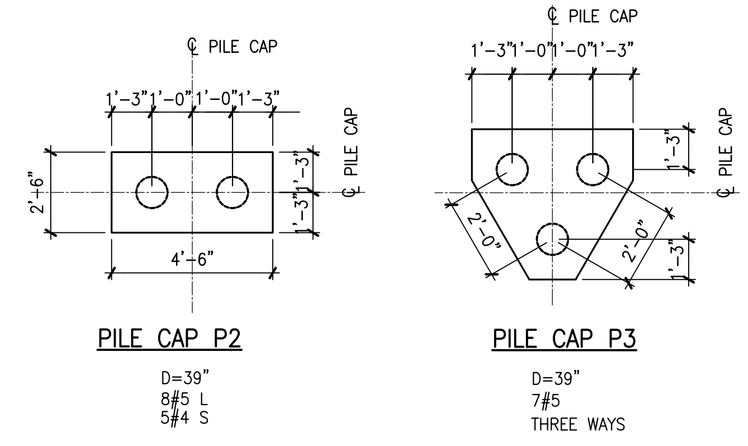

PILE CAP NOTES:

1. ○ DENOTES 8"ø STRAIGHT MINIPILE.
2. PILES ARE 8"ø WITH 1-#18 CENTER BAR EXTENDING FULL LENGHT OF PILE. HOOK TOP END OF THE CENTER BAR INTO PILE CAP. PILE SHALL HAVE MIN. 100 KIPS OF ALLOWABLE BEARING CAPACITY.
3. L DENOTES LONG BARS & S DENOTES SHORT BARS.
4. ALL REBARS IN PILE CAPS SHALL HAVE 180° STD. HOOK @ EA. END.

L TYPICAL PILE CAP DETAILS
SCALE: N.T.S.

NOT FOR CONSTRUCTION

GEORGETOWN LIBRARY
3260 R Street,NW
WASHINGTON, DC

Client
DISTRICT OF COLUMBIA PUBLIC LIBRARY
901 G Street, NW
Washington, D.C. 20001

Architect
MARTINEZ & JOHNSON | ARCHITECTURE
1238 Wisconsin Avenue, NW, Suite 302
Washington, D.C. 20007
202.333.4480

Library Architect
HOSHIDE WILLIAMS ARCHITECTS
206.325.6441

Landscape Architect
Lee + Papa and Associates
202.446.6666

Structural Engineer
RESTL DESIGNERS, INC.
301.258.0093

MEP Engineer
JOHN J. CHRISTIE & ASSOCIATES, P.C
202.364.4410

THESE DRAWINGS, SPECIFICATIONS, AND OTHER DOCUMENTS, (COLLECTIVELY, THE "DOCUMENTS") INCLUDING WITHOUT LIMITATION ELECTRONIC VERSIONS THEREOF AND THE IDEAS, DESIGNS, AND ARRANGEMENTS REPRESENTED THEREBY, ARE AND SHALL REMAIN THE PROPERTY OF MARTINEZ & JOHNSON ARCHITECTURE PC, AS DEFINED BY APPLICABLE CONTRACTUAL AGREEMENTS ("THE AGREEMENTS") AND AS PROTECTED BY THE COPYRIGHT STATUTES OF THE UNITED STATES. USE OF THE DOCUMENTS SHALL BE STRICTLY LIMITED TO THE PROJECT FOR WHICH THEY WERE PREPARED AND DEVELOPED ("THE PROJECT") PER THE TERMS OF THE AGREEMENTS. NO PART OF THE DOCUMENTS SHALL BE COPIED, DISCLOSED TO OTHERS, OR USED IN CONNECTION WITH ANY OTHER WORK OR PROJECT, OR BY ANY OTHER PERSONS FOR ANY PURPOSES, OTHER THAN THE COMPLETION OF THE PROJECT, WITHOUT THE SPECIFIC WRITTEN AUTHORIZATION OF MARTINEZ & JOHNSON ARCHITECTURE PC. THE DOWNLOADING, OPENING, OR VIEWING OF ELECTRONIC VERSIONS OF THE DOCUMENTS OR VISUAL CONTACT WITH ANY PRINTED FORM THEREOF SHALL CONSTITUTE CONCLUSIVE EVIDENCE OF ACCEPTANCE OF THESE RESTRICTIONS.

MJ/A Project No.7590

DATE:	DESCRIPTION:
09.01.08	DESIGN DEVELOPMENT
12.19.08	PERMIT SET
01.26.09	PERMIT SET

SHEET TITLE:

TYPICAL DETAILS

S3.2

© 2008 MJ/A

RESTL Designers Inc.- S:\GNLR\DRAWINGS\STRUCT\CURRENT\S3.2.dwg
[S3.2] 01/23/09 - 4:41pm BChang

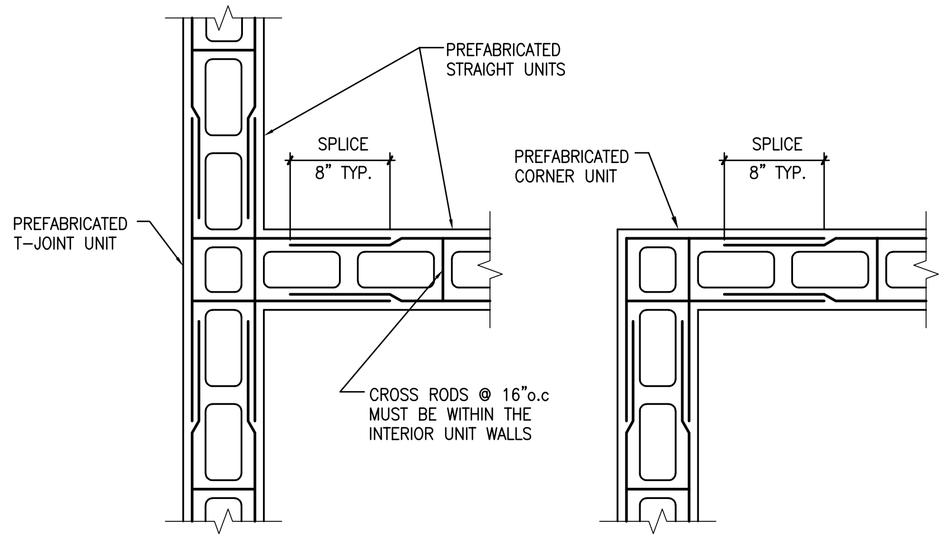

NOTE: SEE SPECIFICATIONS FOR MORE INFORMATION.

A HORIZONTAL CMU JOINT REINF. DETAILS

SCALE: N.T.S.

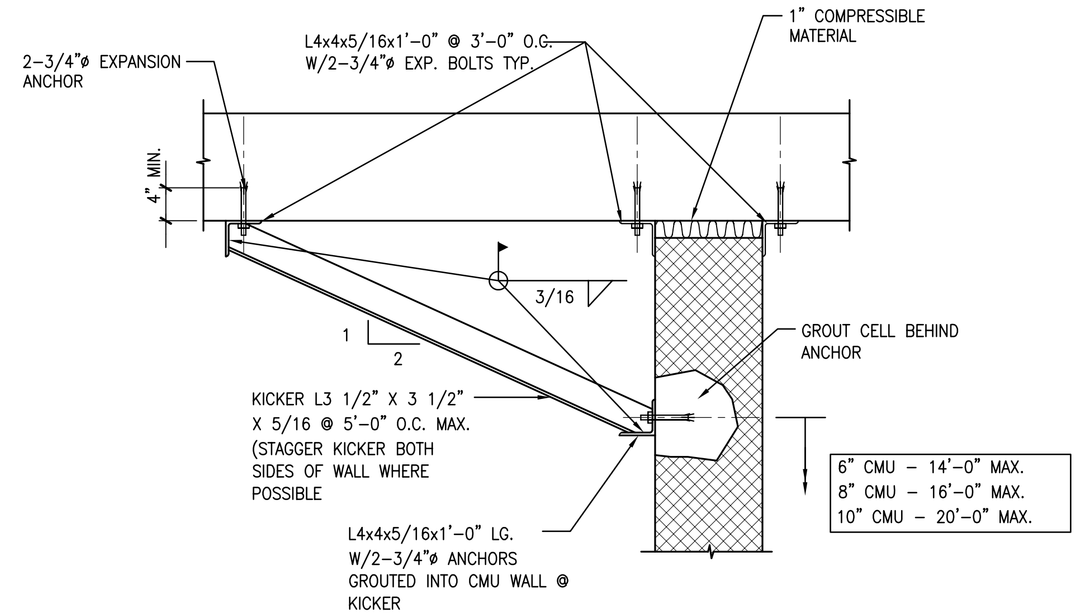

B INTERIOR CMU PARTITION BRACING DETAIL

SCALE: N.T.S.

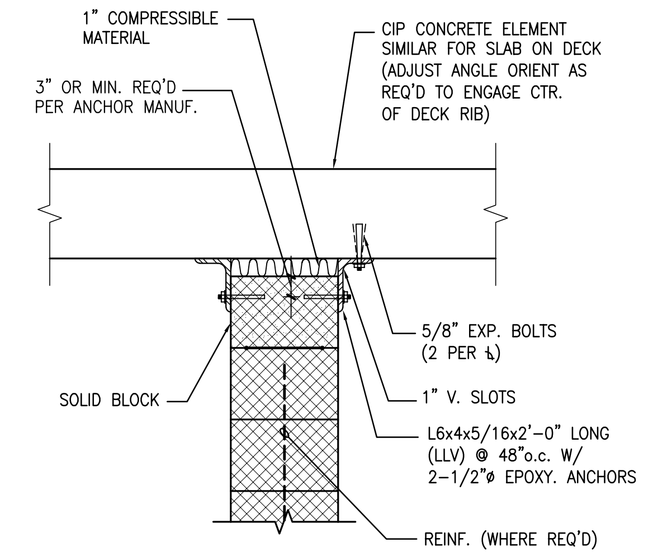

C TYPICAL MASONRY TOP CONNECTION

SCALE: N.T.S.

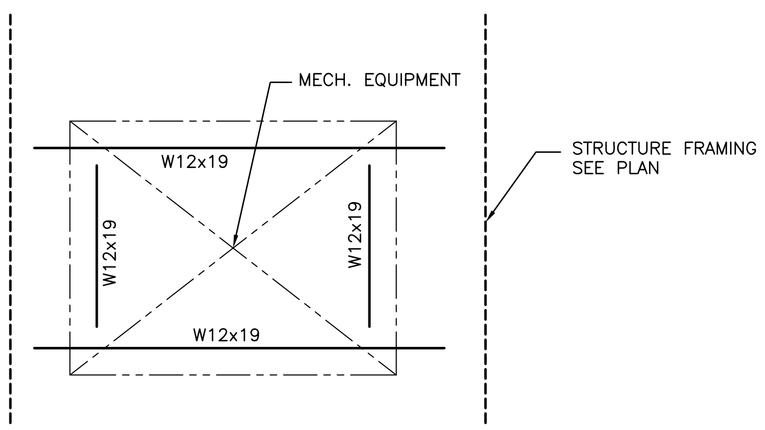

D TYP. MECH. EQUIPMENT SUPPORT FRAMING

SCALE: N.T.S.

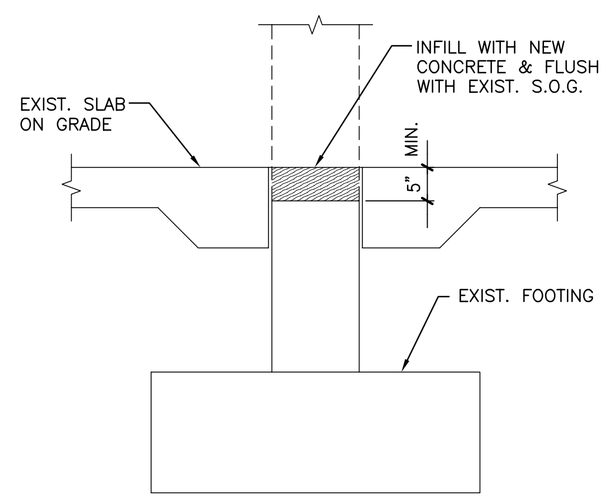

E TYP. EXIST. WALL REMOVAL DETAIL AT SLAB ON GRADE

SCALE: N.T.S.

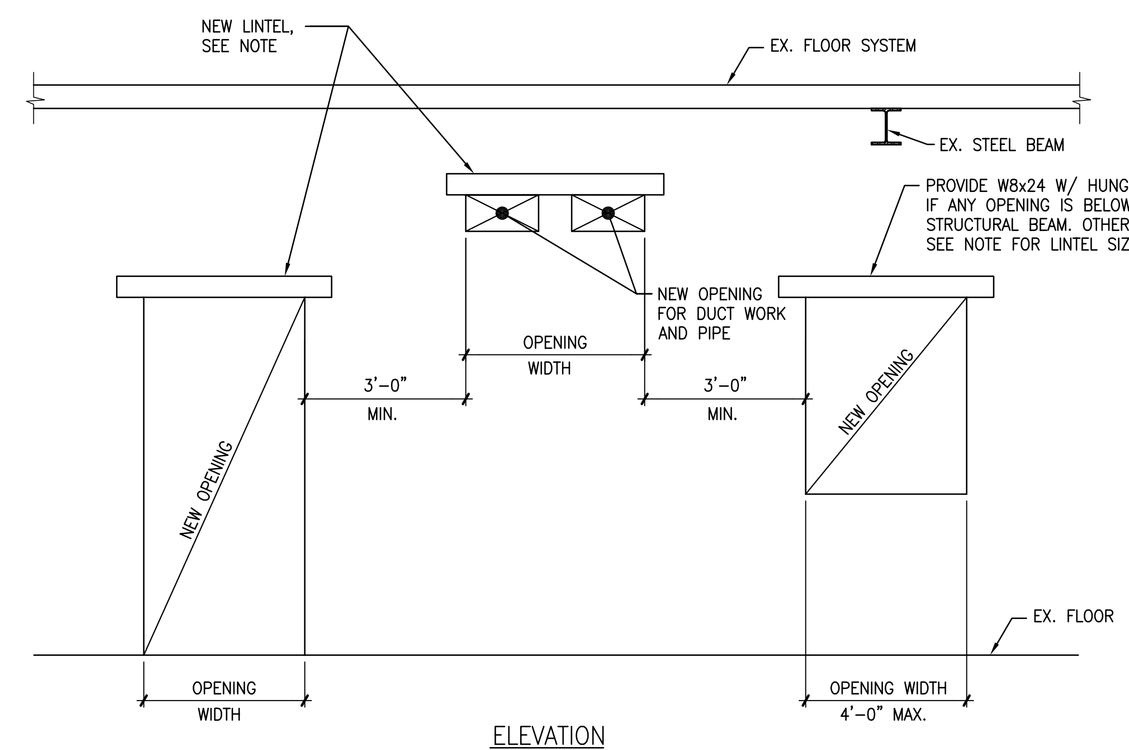

F TYPICAL NEW OPENING IN EXISTING WALL FOR DOOR/WINDOW AND DUCTWORK/PIPE

SCALE: N.T.S.

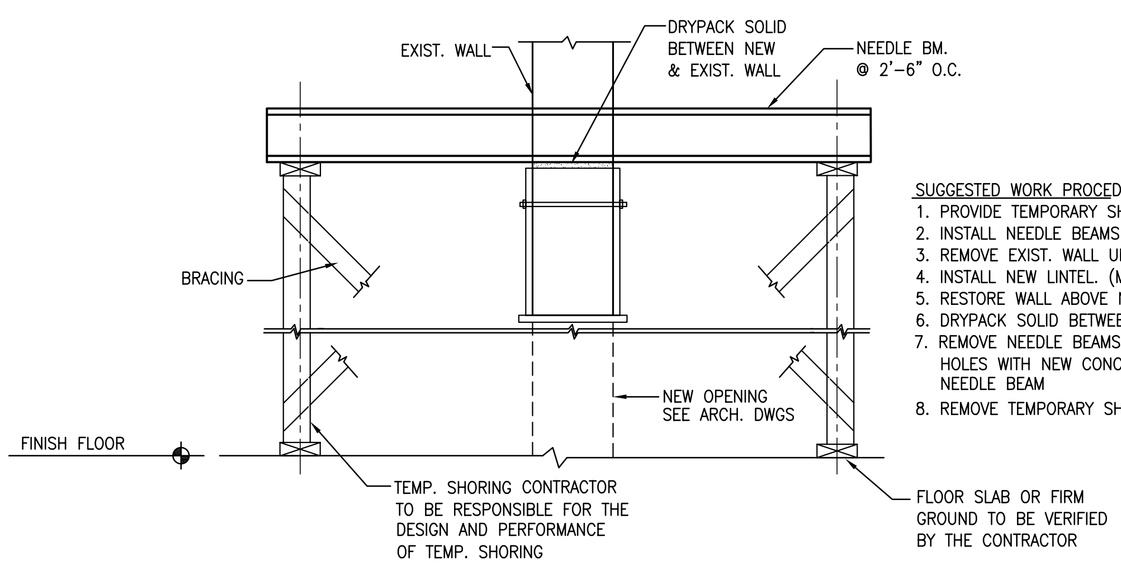

SUGGESTED WORK PROCEDURE

1. PROVIDE TEMPORARY SHORING STRUCTURE.
2. INSTALL NEEDLE BEAMS FOR EXISTING WALL.
3. REMOVE EXIST. WALL UNDER NEEDLE BEAMS.
4. INSTALL NEW LINTEL. (MAY BE STEEL LINTEL BEAM)
5. RESTORE WALL ABOVE NEW OPENING WITH NEW CMU
6. DRYPACK SOLID BETWEEN NEW & EXISTING.
7. REMOVE NEEDLE BEAMS ONE AT A TIME AND PATCH HOLES WITH NEW CONC. BEFORE REMOVING NEXT NEEDLE BEAM
8. REMOVE TEMPORARY SHORING STRUCTURE.

G SUGGESTED WORK PROCEDURE FOR ADDING OPENING THROUGH EXIST WALL

SCALE: N.T.S.

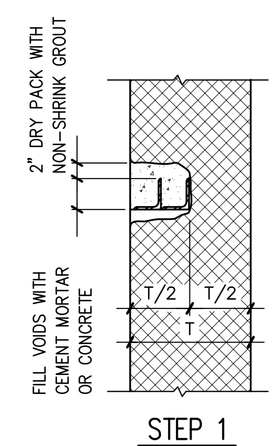

STEP 1

1. POCKET OUT ONE HALF THICKNESS OF WALL.
2. INSTALL ANGLE LINTELS AS SHOWN. PROVIDE ONE ANGLE FOR EACH 4" THICKNESS OF WALL.
3. FILL VOIDS BETWEEN ANGLES AND AT END BEARING WITH CEMENT MORTOR OR CONC.
4. DRY PACK TOP WITH NON-SHRINK GROUT.

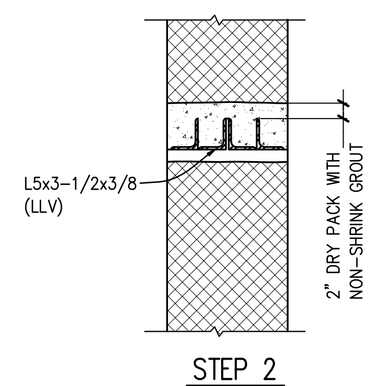

STEP 2

1. REPEAT SECOND HALF OF WALL SAME AS STEP ONE.

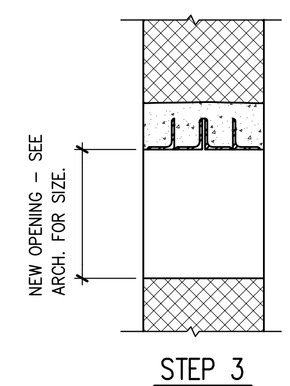

STEP 3

1. REMOVE REMAINDER OF EXIST WALL BELOW NEW LINTELS AS REQ'D.

FOR OPENINGS NOT WIDER THAN 4'-0"

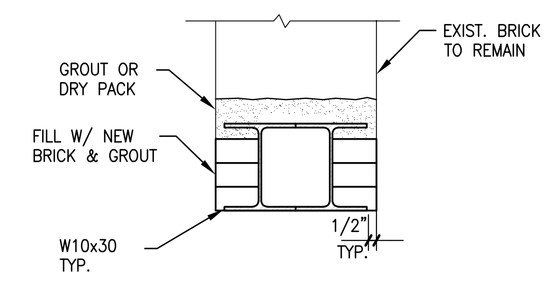

USE THE SAME PROCEDURE AS FOR OPENINGS OF 4'-0"

FOR OPENINGS NOT WIDER THAN 10'-0"

NOT FOR CONSTRUCTION

GEORGETOWN LIBRARY

3260 R Street,NW
WASHINGTON, DC

Client
DISTRICT OF COLUMBIA PUBLIC LIBRARY
901 G Street, NW
Washington, D.C. 20001

Architect
MARTINEZ & JOHNSON | ARCHITECTURE
1238 Wisconsin Avenue, NW, Suite 302
Washington, D.C. 20007
202.333.4480

Library Architect
HOSHIDE WILLIAMS ARCHITECTS
206.325.6441

Landscape Architect
Lee + Papa and Associates
202.446.6666

Structural Engineer
RESTL DESIGNERS, INC.
301.258.0093

MEP Engineer
JOHN J. CHRISTIE & ASSOCIATES, P.C
202.364.4410

THESE DRAWINGS, SPECIFICATIONS, AND OTHER DOCUMENTS, (COLLECTIVELY, THE "DOCUMENTS") INCLUDING WITHOUT LIMITATION ELECTRONIC VERSIONS THEREOF AND THE IDEAS, DESIGNS, AND ARRANGEMENTS REPRESENTED THEREBY, ARE AND SHALL REMAIN THE PROPERTY OF MARTINEZ & JOHNSON ARCHITECTURE PC, AS DEFINED BY APPLICABLE CONTRACTUAL AGREEMENTS ("THE AGREEMENTS") AND AS PROTECTED BY THE COPYRIGHT STATUTES OF THE UNITED STATES. USE OF THE DOCUMENTS SHALL BE STRICTLY LIMITED TO THE PROJECT FOR WHICH THEY WERE PREPARED AND DEVELOPED ("THE PROJECT") PER THE TERMS OF THE AGREEMENTS. NO PART OF THE DOCUMENTS SHALL BE COPIED, DISCLOSED TO OTHERS, OR USED IN CONNECTION WITH ANY OTHER WORK OR PROJECT, OR BY ANY OTHER PERSONS FOR ANY PURPOSES, OTHER THAN THE COMPLETION OF THE PROJECT, WITHOUT THE SPECIFIC WRITTEN AUTHORIZATION OF MARTINEZ & JOHNSON ARCHITECTURE PC. THE DOWNLOADING, OPENING, OR VIEWING OF ELECTRONIC VERSIONS OF THE DOCUMENTS OR VISUAL CONTACT WITH ANY PRINTED FORM THEREOF SHALL CONSTITUTE CONCLUSIVE EVIDENCE OF ACCEPTANCE OF THESE RESTRICTIONS.

MJ/A Project No.7590

DATE:	DESCRIPTION:
09.01.08	DESIGN DEVELOPMENT
12.19.08	PERMIT SET
01.26.09	PERMIT SET

SHEET TITLE:

TYPICAL DETAILS

S3.3

© 2008 MJA

RESTL Designers Inc.- S:\GNLR\DRAWINGS\STRUCT\CURRENT\S3.3.dwg
[S3.3] 01/23/09 - 4:41pm BChang

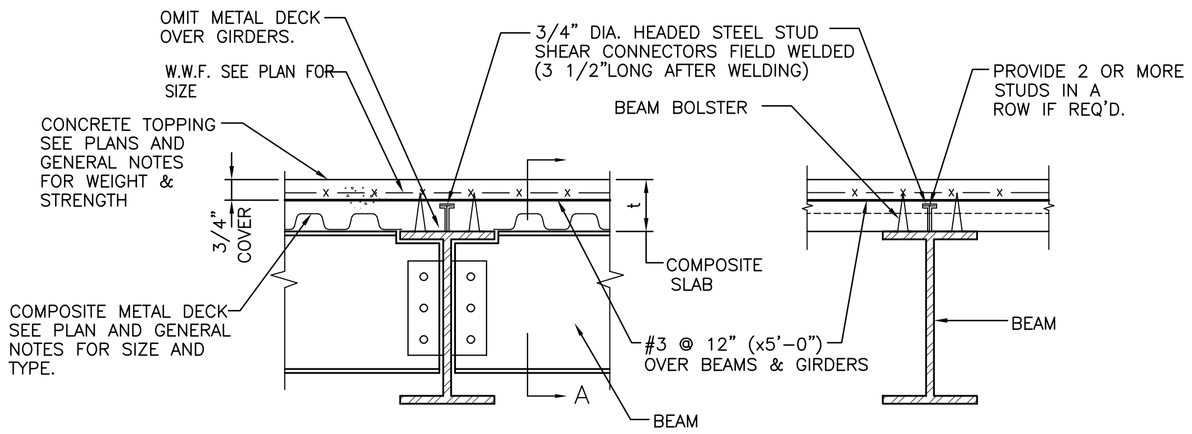

NOTES

1. SHEAR CONNECTORS SHALL BE SPACED EQUALLY ON BEAM FLANGE UNLESS OTHERWISE SHOWN ON PLANS. PROVIDE ADD'L. STUDS AS NEEDED FOR 24" MAX. STUD SPACING.
2. CONNECTIONS FOR COMPOSITE BEAMS SHALL BE DESIGNED FOR THE REACTIONS SHOWN ON THE PLAN.
3. EACH SHEAR CONNECTOR SHALL BE CAPABLE OF SUPPORTING A MINIMUM HORIZONTAL SHEAR LOAD OF 21.9 KIPS ULTIMATE IN LIGHT WEIGHT CONCRETE & 26.1 KIPS ULTIMATE IN NORMAL WEIGHT CONCRETE.
4. CONTRACTOR SHALL ALLOW ADDITIONAL CONCRETE IN SLAB DUE TO MIN. OF 1" DEFLECTION DURING POURING OF SLAB TO BRING THE FLOOR ELEVATION TO WITHIN 1/8" FROM TRUE SLAB ELEVATION.
5. W.W.F. TO BE SPLICED BY OVERLAPPING ONE FULL PANEL +2", AND WIRE TIED 4 TIMES PER SHEET.

SECTION A

A TYPICAL COMPOSITE BEAM AND GIRDER DETAIL

SCALE: N.T.S.

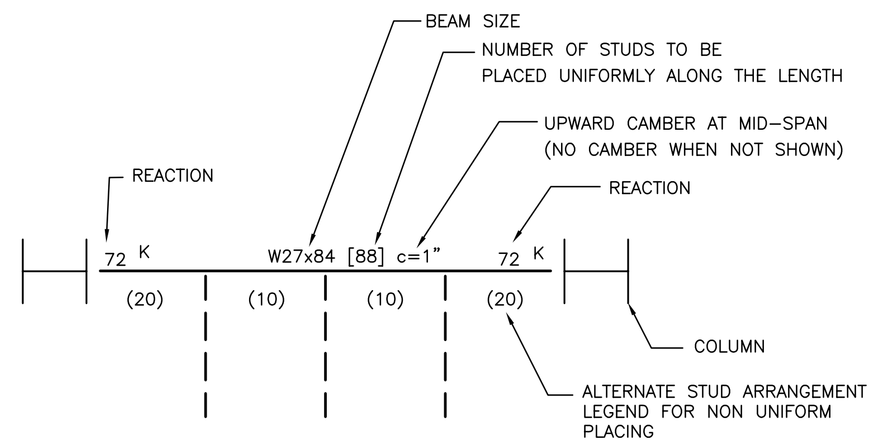

NOTE: BEAMS INDICATED WITH SIZES ONLY ARE NONCOMPOSITE BEAMS.

B COMPOSITE BEAM LEGEND

SCALE: N.T.S.

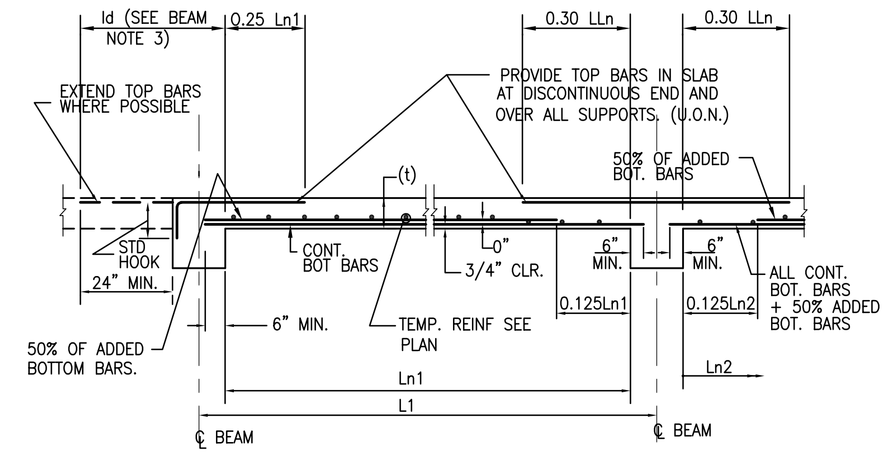

xx — SLAB THICKNESS IN INCHES
ONE WAY SLAB SHOWN THUS ON PLAN

NOTE: 1. LLn DENOTES LONGER OF Ln1 AND Ln2
2. TEMP BARS TO BE SPLICED W/ CLASS A SPLICE STAGGERED SUCH THAT NO MORE THAN 25% ARE SPLICED IN THE SAME LOCATION.

D TYPICAL ONE-WAY SLAB DETAIL

SCALE: N.T.S.

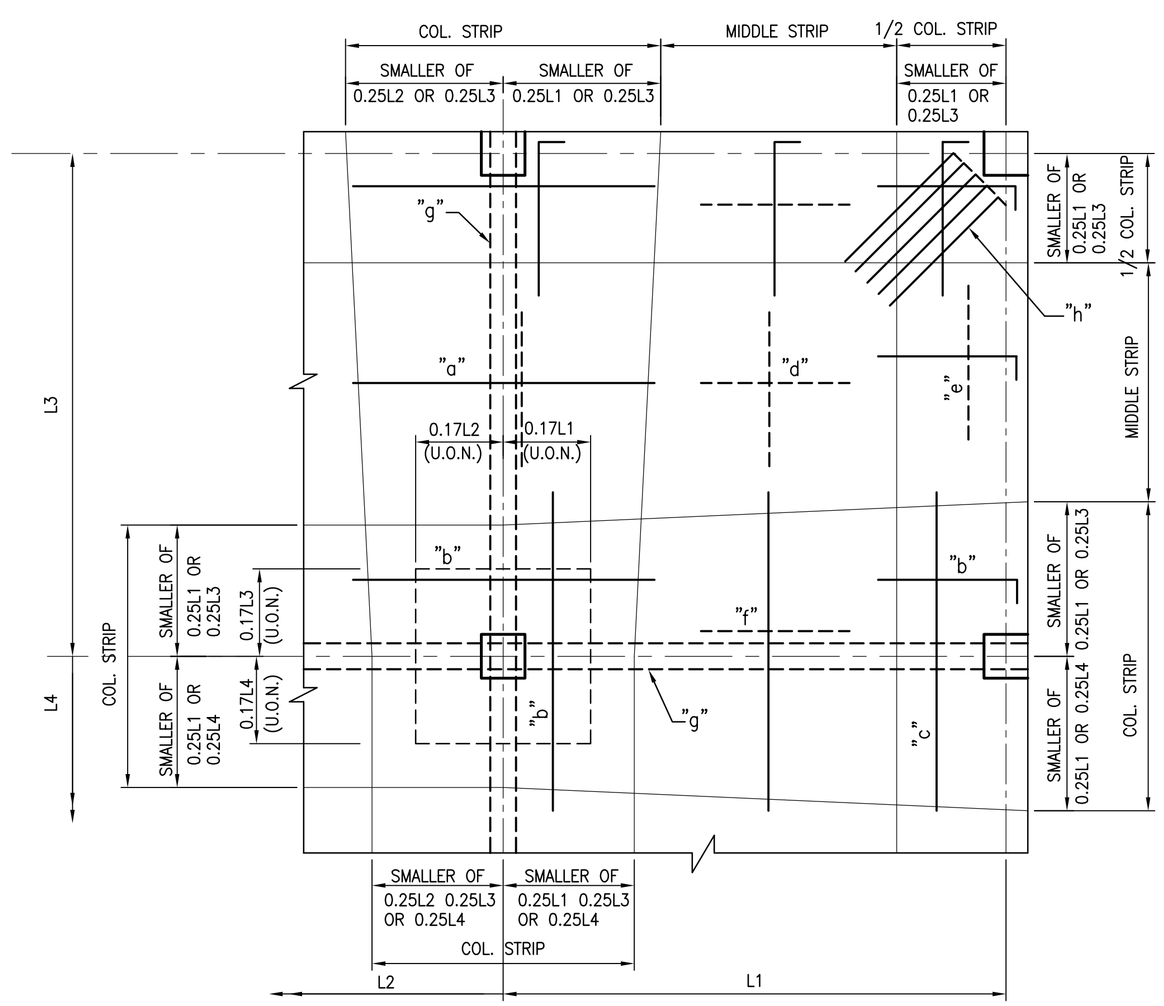

E TYPICAL TWO-WAY FLAT SLAB DETAIL

SCALE: N.T.S.

NOTES:

1. THE GENERAL OR CONTINUOUS REINFORCING (TOP & BOTTOM) CALLED ON PLANS SHALL BE CONTINUOUS UTILIZING THE LONGEST REBARS PRACTICAL AND SHALL BE SPLICED ONLY AS NECESSARY AS FOLLOWS:
   a. ALL SPLICES SHALL BE CLASS A SPLICES.
   b. ALL TOP REINFORCING SHALL BE SPLICED AT MID POINT BETWEEN COLUMNS.
   c. ALL BOTTOM REINFORCING SHALL BE SPLICED AT COLUMN LOCATIONS.
2. "a" INDICATE ADDED TOTAL TOP BARS TO BE PLACED WITH EQUAL SPACING WITHIN THE MIDDLE STRIP.
   "b" INDICATE ADDED TOP BARS TO BE PLACED WITH EQUAL SPACING WITHIN THE COLUMN STRIP.
   "c" INDICATE ADDED TOP BARS TO BE PLACED WITH EQUAL SPACING WITHIN THE 1/2 COLUMN STRIP.
   "d" INDICATE ADDED BOTTOM BARS TO BE PLACED SYMMETRICALLY ABOUT THE CENTER OF MIDDLE STRIP.
   "e" INDICATE ADDED BOTTOM BARS TO BE PLACED SYMMETRICALLY ABOUT THE CENTER OF 1/2 COLUMN STRIP.
   "f" INDICATE ADDED BOTTOM BARS TO BE PLACED SYMMETRICALLY ABOUT THE CENTER OF COLUMN STRIP.
   "g" INDICATE PROVIDE CONT. (2) CONT. BOTTOM BAR E.W. WITHIN COL. CORE.
   "g" INDICATE PROVIDE 5-#4 @ 6"x 4'-0" LONG WITH STD HOOK @ CORNERS @ 3rd LAYER.

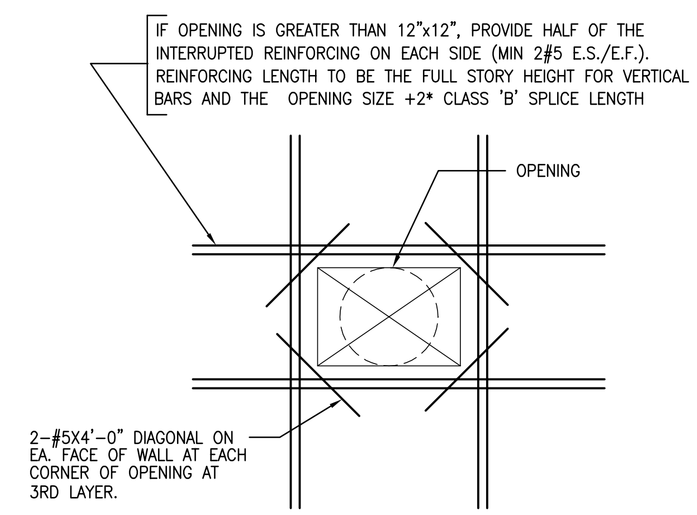

F REINFORCING AROUND CONCRETE WALL OPENINGS

SCALE: N.T.S.

NOT FOR CONSTRUCTION

GEORGETOWN LIBRARY

3260 R Street,NW
WASHINGTON, DC

Client
DISTRICT OF COLUMBIA PUBLIC LIBRARY
901 G Street, NW
Washington, D.C. 20001

Architect
MARTINEZ & JOHNSON | ARCHITECTURE
1238 Wisconsin Avenue, NW, Suite 302
Washington, D.C. 20007
202.333.4480

Library Architect
HOSHIDE WILLIAMS ARCHITECTS
206.325.6441

Landscape Architect
Lee + Papa and Associates
202.446.6666

Structural Engineer
RESTL DESIGNERS, INC.
301.258.0093

MEP Engineer
JOHN J. CHRISTIE & ASSOCIATES, P.C
202.364.4410

THESE DRAWINGS, SPECIFICATIONS, AND OTHER DOCUMENTS, (COLLECTIVELY, THE "DOCUMENTS") INCLUDING WITHOUT LIMITATION ELECTRONIC VERSIONS THEREOF AND THE IDEAS, DESIGNS, AND ARRANGEMENTS REPRESENTED THEREBY, ARE AND SHALL REMAIN THE PROPERTY OF MARTINEZ & JOHNSON ARCHITECTURE PC, AS DEFINED BY APPLICABLE CONTRACTUAL AGREEMENTS ("THE AGREEMENTS") AND AS PROTECTED BY THE COPYRIGHT STATUTES OF THE UNITED STATES. USE OF THE DOCUMENTS SHALL BE STRICTLY LIMITED TO THE PROJECT FOR WHICH THEY WERE PREPARED AND DEVELOPED ("THE PROJECT") PER THE TERMS OF THE AGREEMENTS. NO PART OF THE DOCUMENTS SHALL BE COPIED, DISCLOSED TO OTHERS, OR USED IN CONNECTION WITH ANY OTHER WORK OR PROJECT, OR BY ANY OTHER PERSONS FOR ANY PURPOSES, OTHER THAN THE COMPLETION OF THE PROJECT, WITHOUT THE SPECIFIC WRITTEN AUTHORIZATION OF MARTINEZ & JOHNSON ARCHITECTURE PC. THE DOWNLOADING, OPENING, OR VIEWING OF ELECTRONIC VERSIONS OF THE DOCUMENTS OR VISUAL CONTACT WITH ANY PRINTED FORM THEREOF SHALL CONSTITUTE CONCLUSIVE EVIDENCE OF ACCEPTANCE OF THESE RESTRICTIONS.

MJ/A Project No.7590

DATE:	DESCRIPTION:
09.01.08	DESIGN DEVELOPMENT
12.19.08	PERMIT SET
01.26.09	PERMIT SET

SHEET TITLE:

TYPICAL DETAILS

S3.4

© 2008 MJ/A

RESTL Designers Inc.- S:\GNLR\DRAWINGS\STRUCT\CURRENT\S3.4.dwg
[S3.4] 01/23/09 - 4:41pm BChang

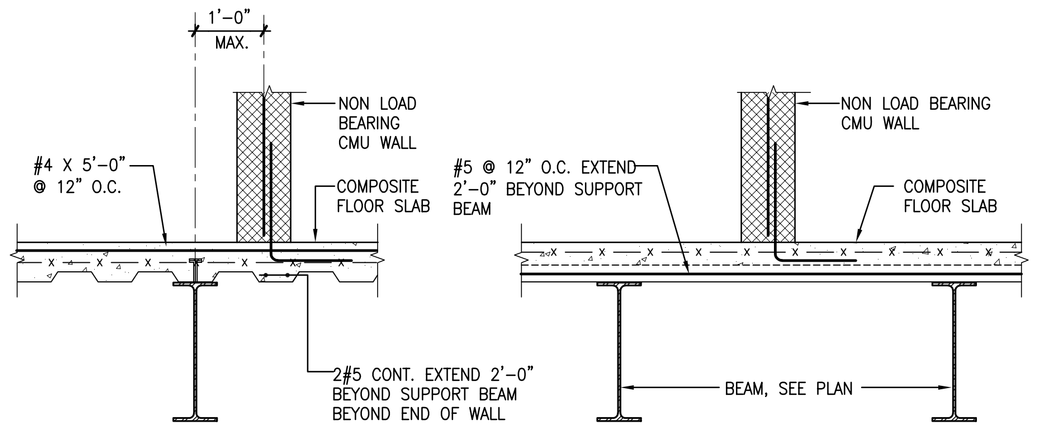

BEAM PARALLEL TO DECK BEAM PERPENDICULAR TO DECK

A TYP. FLOOR SLAB DETAIL AT CMU WALL

SCALE: N.T.S.

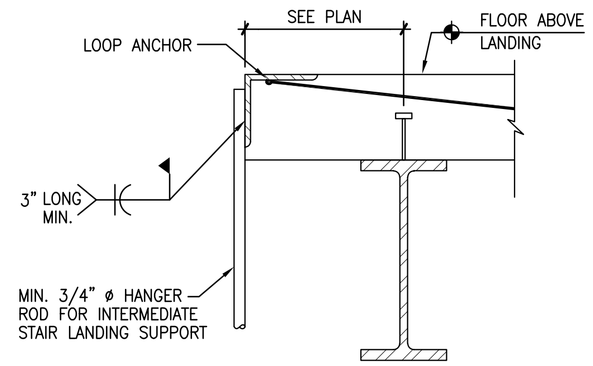

B INTERM. LANDING HANGER CONNECTION

SCALE: N.T.S.

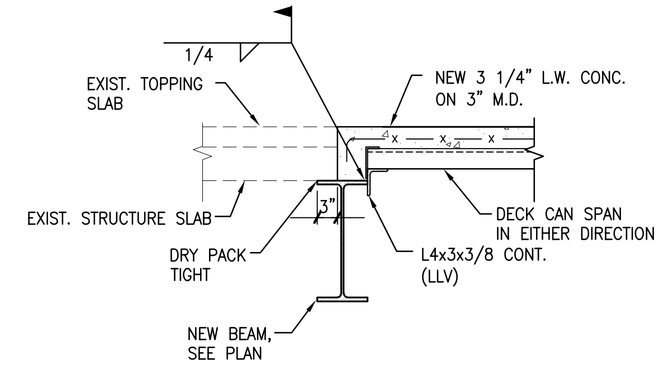

C TYP. NEW BEAM SUPPORTING EXIST. & NEW SLAB DETAIL

SCALE: N.T.S.

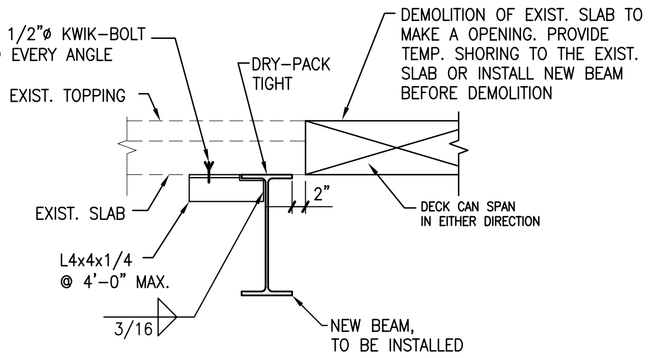

D TYP. SLAB FRAMING DETAIL

SCALE: N.T.S.

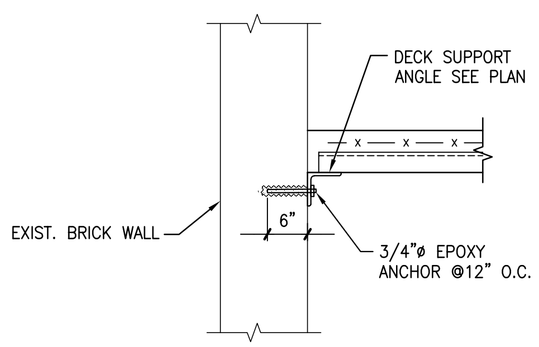

E TYP. DECK SUPPORT ANGLE TO EXIST. BRICK WALL SUPORT DETAIL

SCALE: N.T.S.

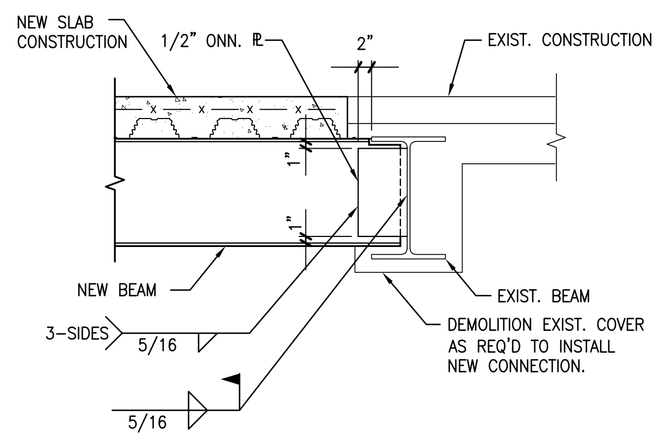

F TYP. NEW BEAM TO EXIST. BEAM CONNECTION DETAIL

SCALE: N.T.S.

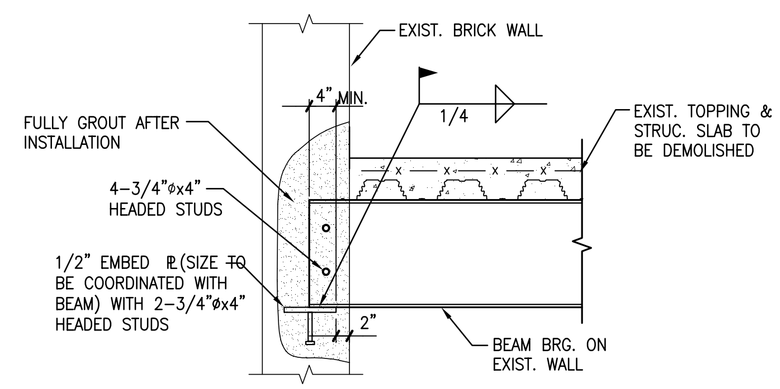

G TYP. NEW BEAM BEARING ON EXIST. WALL DETAIL

SCALE: N.T.S.

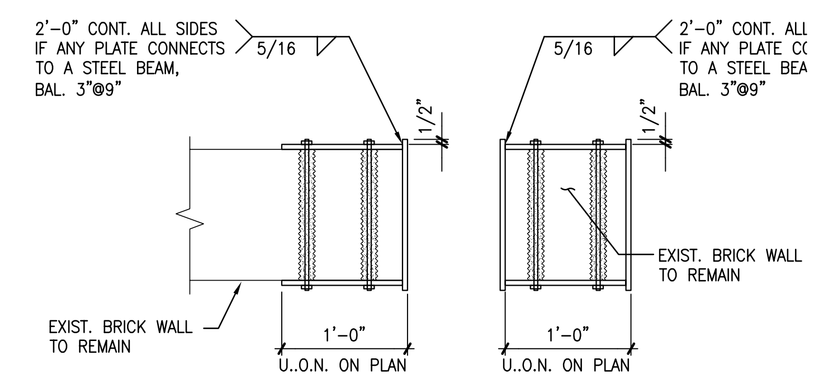

H TYP. BRICK WALL REINFORCING PLATE CONNECTION DETAIL

SCALE: N.T.S.

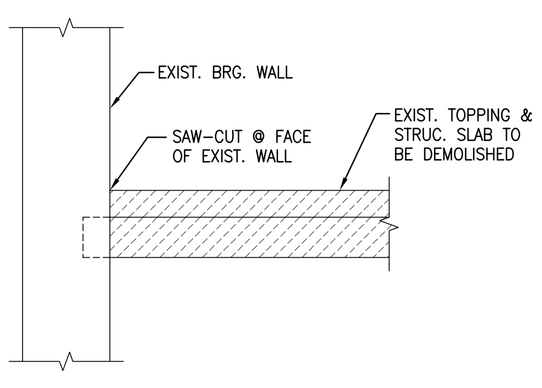

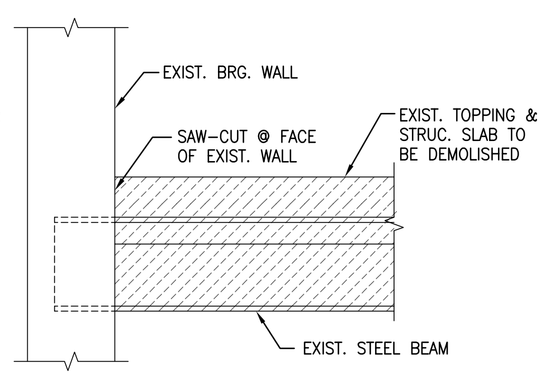

FOR CONDITION WHERE BEAM WILL NOT BE REPLACED AT THE SAME LOCATION

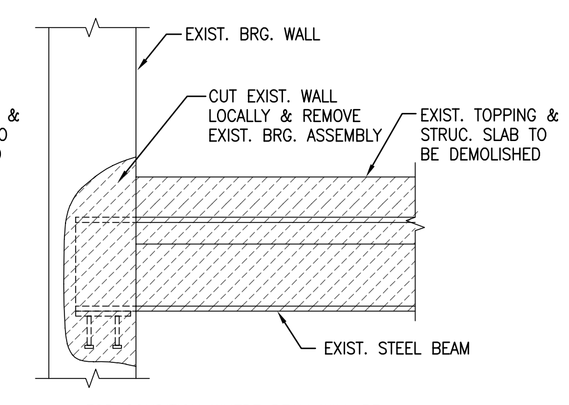

FOR CONDITION WHERE BEAM WILL BE REPLACED AT THE SAME LOCATION

J TYP. SLAB DEMOLITION DETAIL

SCALE: N.T.S.

NOT FOR CONSTRUCTION

GEORGETOWN LIBRARY

3260 R Street,NW
WASHINGTON, DC

Client
DISTRICT OF COLUMBIA PUBLIC LIBRARY
901 G Street, NW
Washington, D.C. 20001

Architect
MARTINEZ & JOHNSON | ARCHITECTURE
1238 Wisconsin Avenue, NW, Suite 302
Washington, D.C. 20007
202.333.4480

Library Architect
HOSHIDE WILLIAMS ARCHITECTS
206.325.6441

Landscape Architect
Lee + Papa and Associates
202.446.6666

Structural Engineer
RESTL DESIGNERS, INC.
301.258.0093

MEP Engineer
JOHN J. CHRISTIE & ASSOCIATES, P.C
202.364.4410

THESE DRAWINGS, SPECIFICATIONS, AND OTHER DOCUMENTS, (COLLECTIVELY, THE "DOCUMENTS") INCLUDING WITHOUT LIMITATION ELECTRONIC VERSIONS THEREOF AND THE IDEAS, DESIGNS, AND ARRANGEMENTS REPRESENTED THEREBY, ARE AND SHALL REMAIN THE PROPERTY OF MARTINEZ & JOHNSON ARCHITECTURE PC, AS DEFINED BY APPLICABLE CONTRACTUAL AGREEMENTS ("THE AGREEMENTS") AND AS PROTECTED BY THE COPYRIGHT STATUTES OF THE UNITED STATES. USE OF THE DOCUMENTS SHALL BE STRICTLY LIMITED TO THE PROJECT FOR WHICH THEY WERE PREPARED AND DEVELOPED ("THE PROJECT") PER THE TERMS OF THE AGREEMENTS. NO PART OF THE DOCUMENTS SHALL BE COPIED, DISCLOSED TO OTHERS, OR USED IN CONNECTION WITH ANY OTHER WORK OR PROJECT, OR BY ANY OTHER PERSONS FOR ANY PURPOSES, OTHER THAN THE COMPLETION OF THE PROJECT, WITHOUT THE SPECIFIC WRITTEN AUTHORIZATION OF MARTINEZ & JOHNSON ARCHITECTURE PC. THE DOWNLOADING, OPENING, OR VIEWING OF ELECTRONIC VERSIONS OF THE DOCUMENTS OR VISUAL CONTACT WITH ANY PRINTED FORM THEREOF SHALL CONSTITUTE CONCLUSIVE EVIDENCE OF ACCEPTANCE OF THESE RESTRICTIONS.

MJ/A Project No.7590

DATE:	DESCRIPTION:
09.01.08	DESIGN DEVELOPMENT
12.19.08	PERMIT SET
01.26.09	PERMIT SET

SHEET TITLE:

TYPICAL DETAILS

S3.5

© 2008 MJ/A

RESTL Designers Inc.- S:\GNLR\DRAWINGS\STRUCT\CURRENT\S3.5.dwg
[S3.5] 01/23/09 - 4:41pm BChang

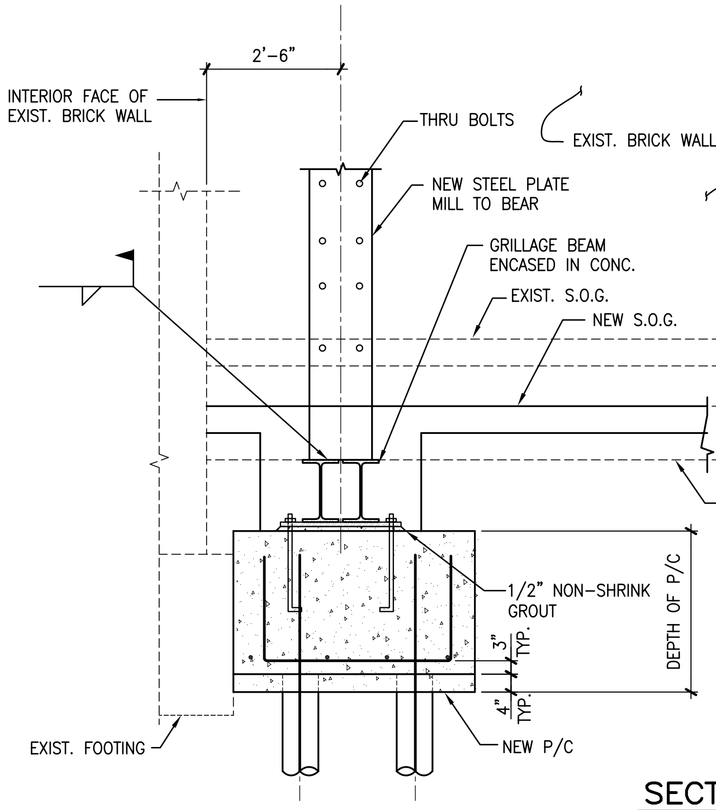

SECTION A S4.1
SCALE: 1/2"=1'-0"

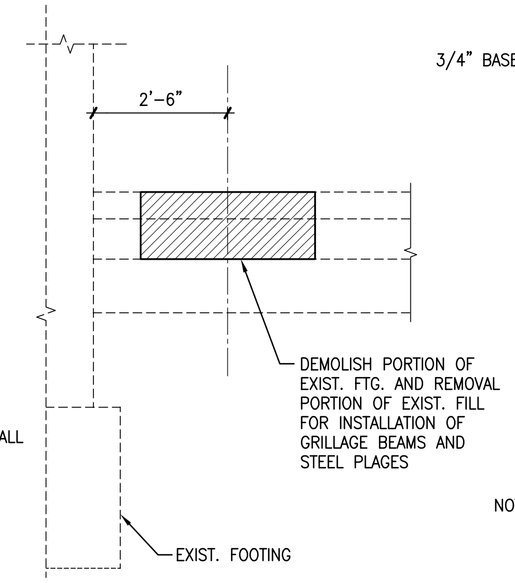

DEMOLITION SECTION

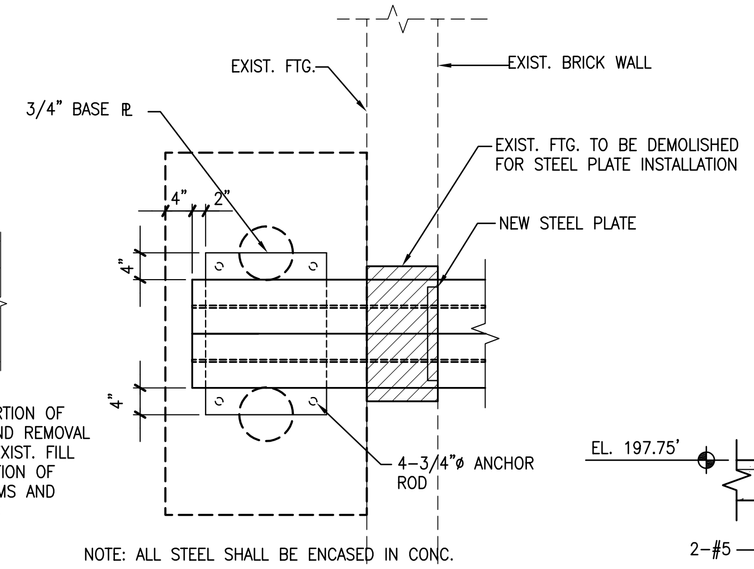

SECTION B S4.1
SCALE: 3/4"=1'-0"

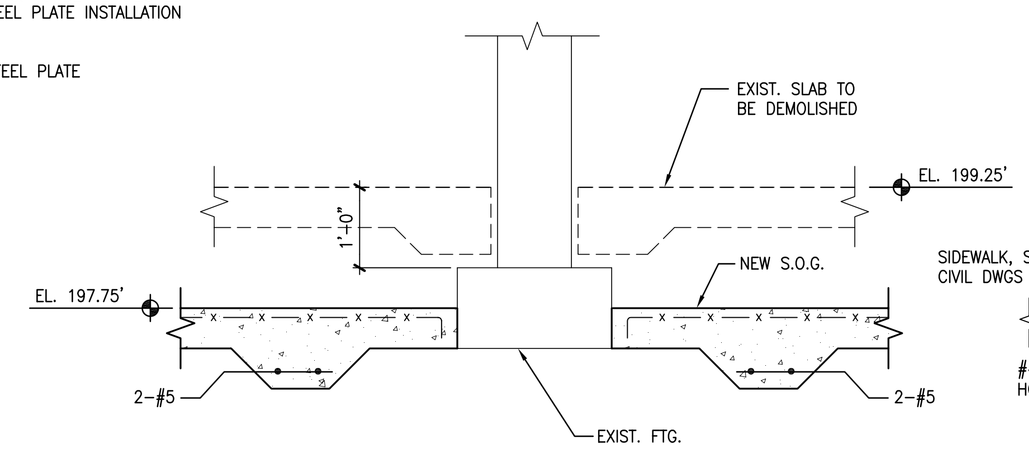

SECTION C S4.1
SCALE: 3/4"=1'-0"

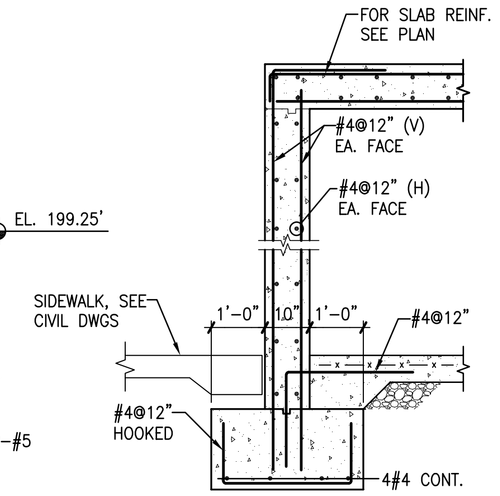

SECTION D S4.1
SCALE: 1/2"=1'-0"

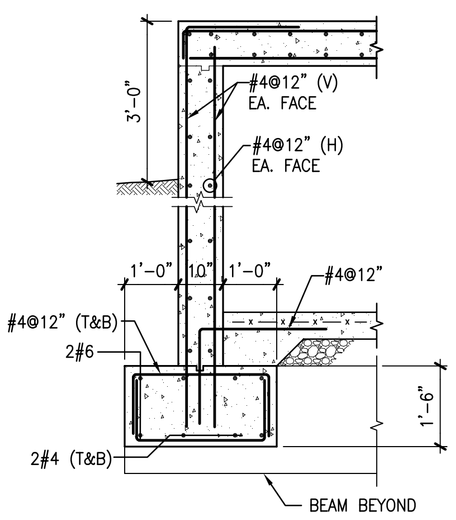

SECTION E S4.1
SCALE: 1/2"=1'-0"

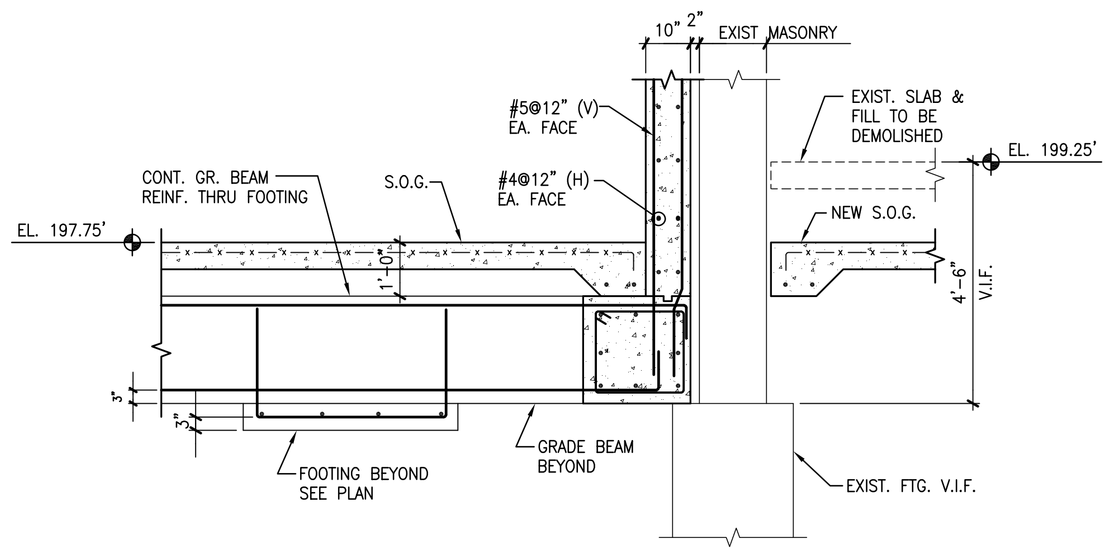

SECTION F S4.1
SCALE: 1/2"=1'-0"

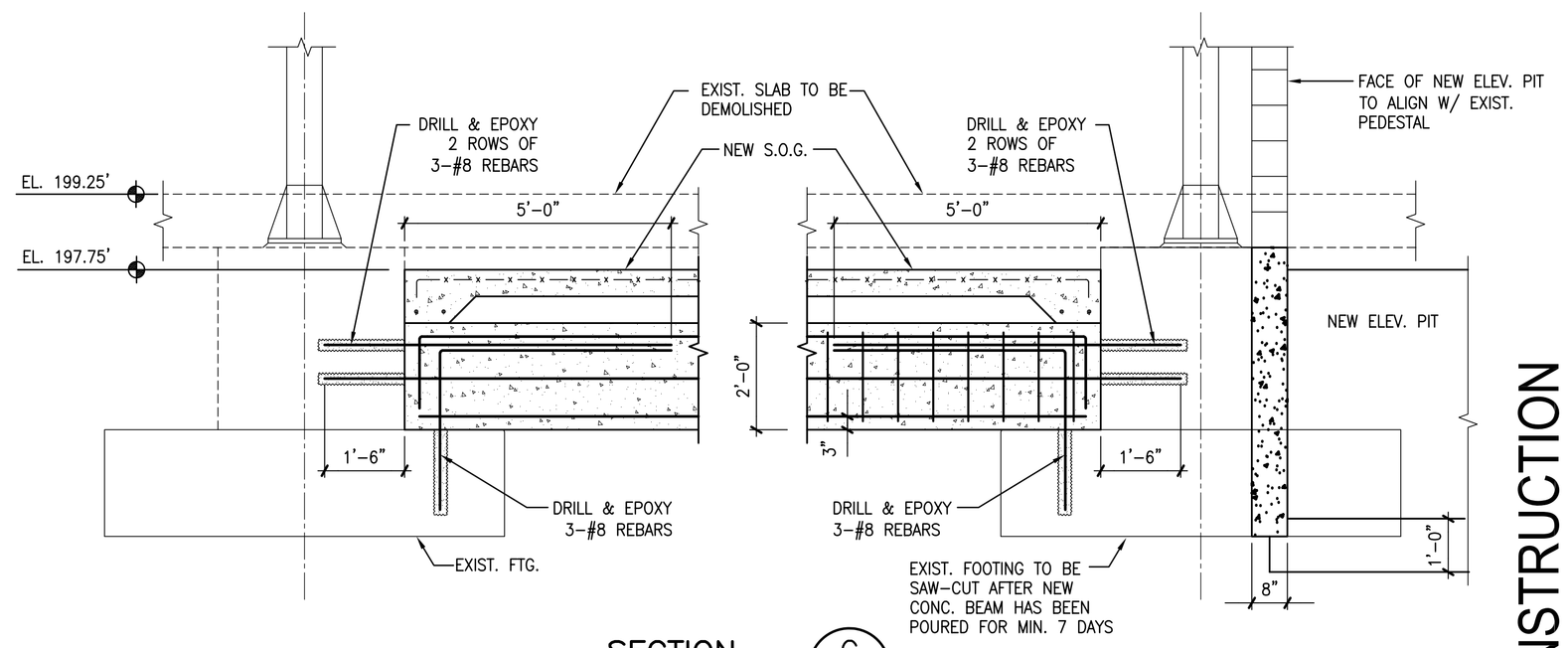

SECTION G S4.1
SCALE: 1/2"=1'-0"

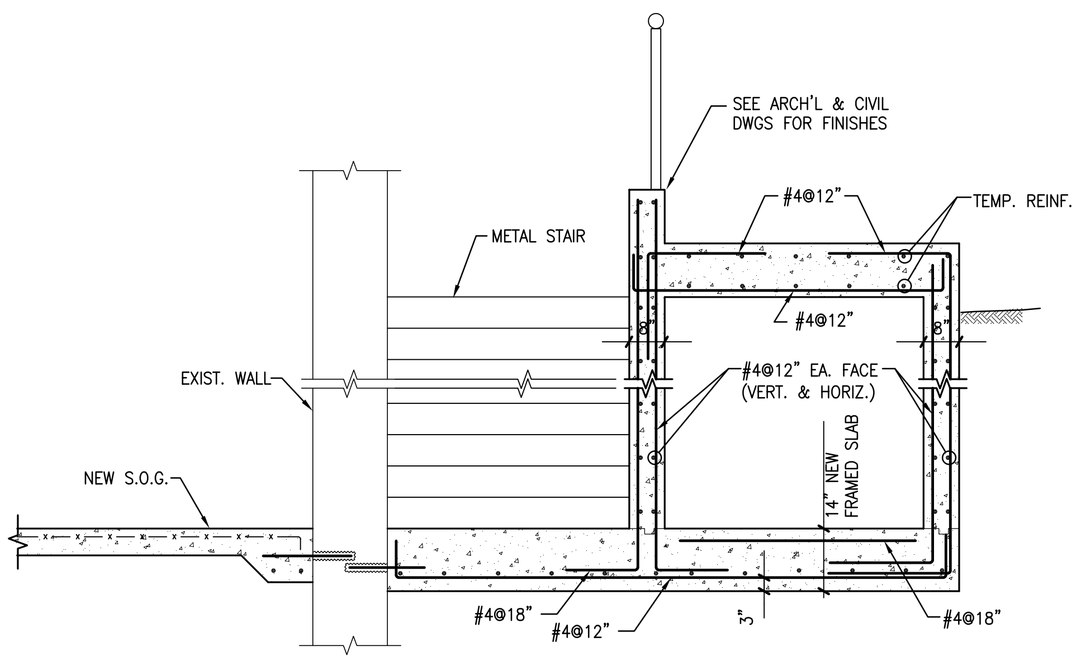

SECTION H S4.1
SCALE: 1/2"=1'-0"

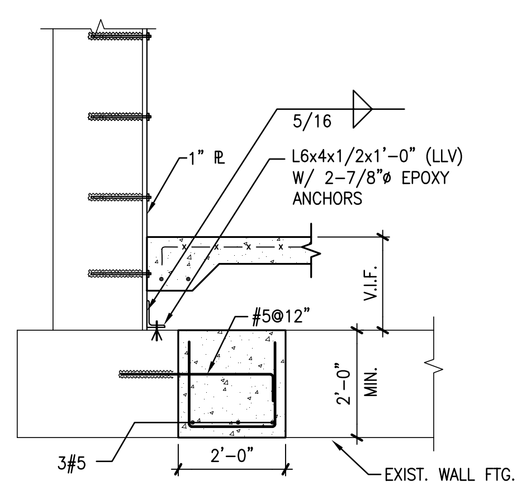

SECTION J S4.1
SCALE: 1/2"=1'-0"

NOT FOR CONSTRUCTION

GEORGETOWN LIBRARY

3260 R Street,NW
WASHINGTON, DC

Client
DISTRICT OF COLUMBIA PUBLIC LIBRARY
901 G Street, NW
Washington, D.C. 20001

Architect
MARTINEZ & JOHNSON | ARCHITECTURE
1238 Wisconsin Avenue, NW, Suite 302
Washington, D.C. 20007
202.333.4480

Library Architect
HOSHIDE WILLIAMS ARCHITECTS
206.325.6441

Landscape Architect
Lee + Papa and Associates
202.446.6666

Structural Engineer
RESTL DESIGNERS, INC.
301.258.0093

MEP Engineer
JOHN J. CHRISTIE & ASSOCIATES, P.C
202.364.4410

THESE DRAWINGS, SPECIFICATIONS, AND OTHER DOCUMENTS, (COLLECTIVELY, THE "DOCUMENTS") INCLUDING WITHOUT LIMITATION ELECTRONIC VERSIONS THEREOF AND THE IDEAS, DESIGNS, AND ARRANGEMENTS REPRESENTED THEREBY, ARE AND SHALL REMAIN THE PROPERTY OF MARTINEZ & JOHNSON ARCHITECTURE PC, AS DEFINED BY APPLICABLE CONTRACTUAL AGREEMENTS ("THE AGREEMENTS") AND AS PROTECTED BY THE COPYRIGHT STATUTES OF THE UNITED STATES. USE OF THE DOCUMENTS SHALL BE STRICTLY LIMITED TO THE PROJECT FOR WHICH THEY WERE PREPARED AND DEVELOPED ("THE PROJECT") PER THE TERMS OF THE AGREEMENTS. NO PART OF THE DOCUMENTS SHALL BE COPIED, DISCLOSED TO OTHERS, OR USED IN CONNECTION WITH ANY OTHER WORK OR PROJECT, OR BY ANY OTHER PERSONS FOR ANY PURPOSES, OTHER THAN THE COMPLETION OF THE PROJECT, WITHOUT THE SPECIFIC WRITTEN AUTHORIZATION OF MARTINEZ & JOHNSON ARCHITECTURE PC. THE DOWNLOADING, OPENING, OR VIEWING OF ELECTRONIC VERSIONS OF THE DOCUMENTS OR VISUAL CONTACT WITH ANY PRINTED FORM THEREOF SHALL CONSTITUTE CONCLUSIVE EVIDENCE OF ACCEPTANCE OF THESE RESTRICTIONS.

MJ/A Project No.7590

DATE:	DESCRIPTION:
09.01.08	DESIGN DEVELOPMENT
12.19.08	PERMIT SET
01.26.09	PERMIT SET

SHEET TITLE:

SECTIONS AND DETAILS

S4.1

RESTL Designers Inc.- S:\GNLR\DRAWINGS\STRUCT\CURRENT\S4.1.dwg
[S4.1] 01/23/09 - 4:42pm BChang

© 2008 MJA

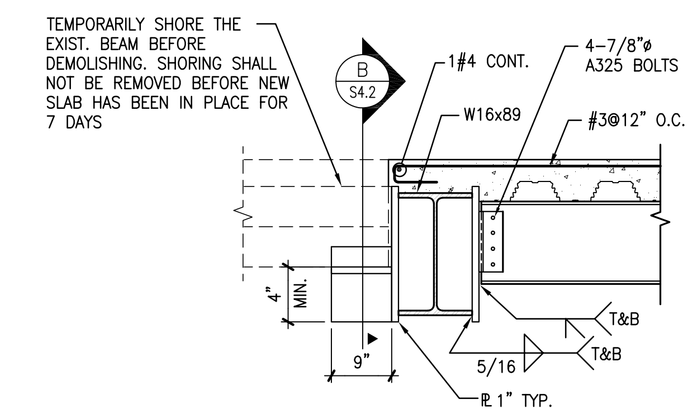

SECTION A S4.2
SCALE: 3/4"=1'-0"

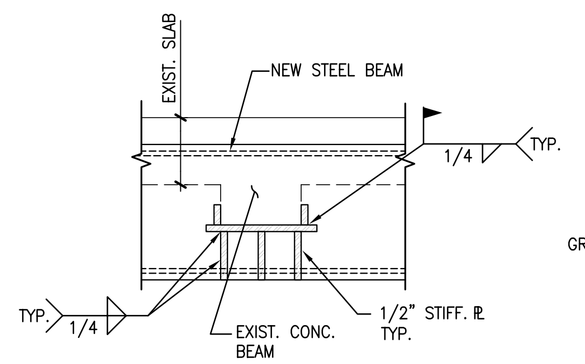

SECTION B S4.2
SCALE: 3/4"=1'-0"

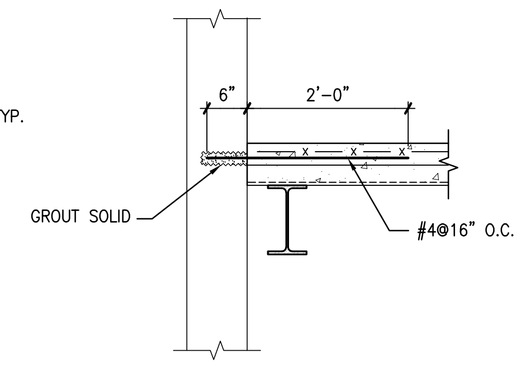

SECTION C S4.2
SCALE: 3/4"=1'-0"

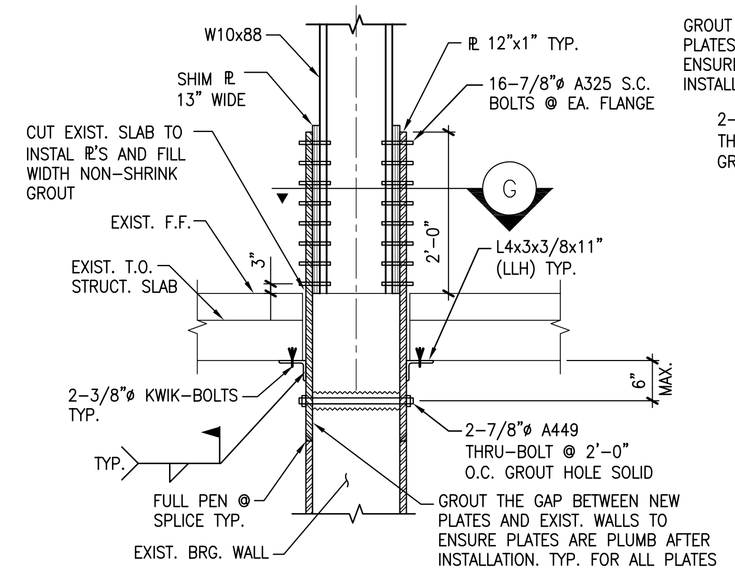

SECTION D S4.2
SCALE: 3/4"=1'-0"

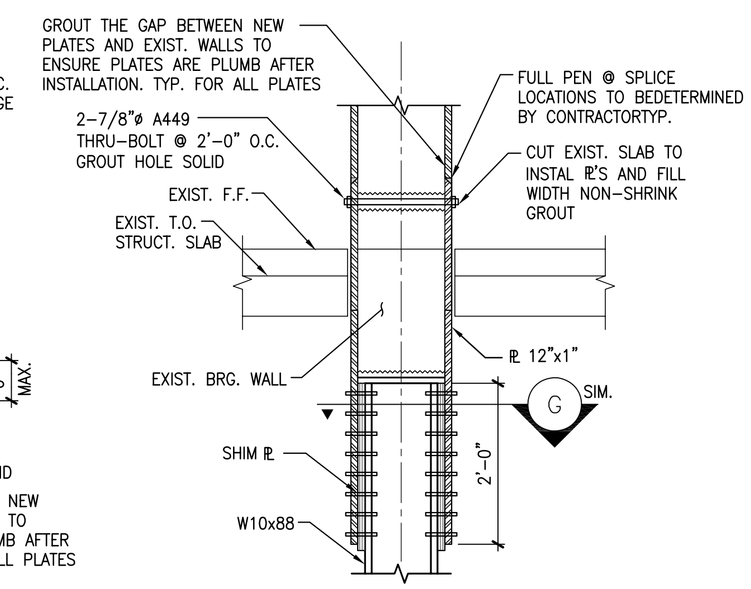

SECTION E S4.2
SCALE: 3/4"=1'-0"

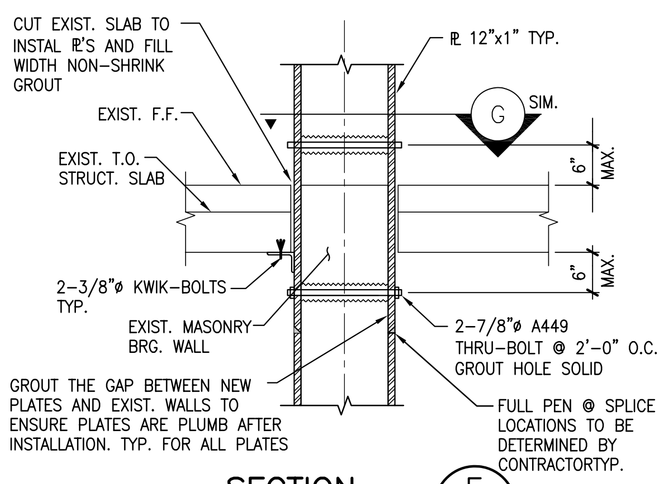

SECTION F S4.2
SCALE: 3/4"=1'-0"

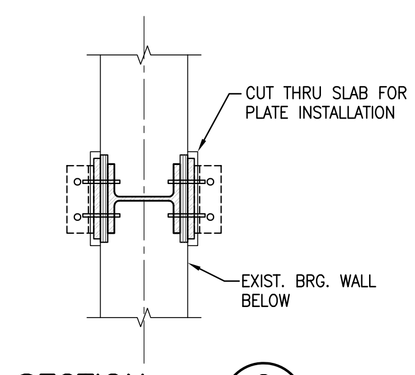

SECTION G S4.2
SCALE: 3/4"=1'-0"

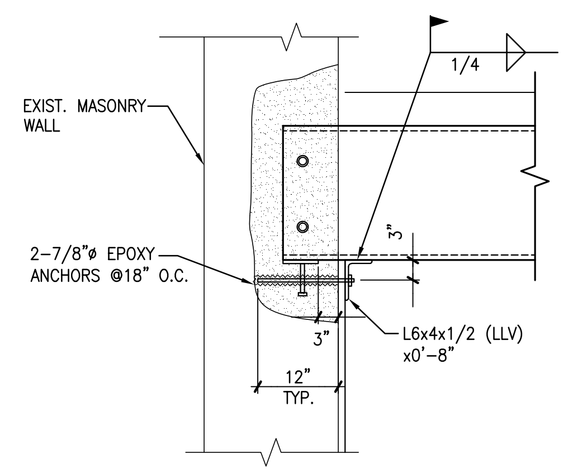

SECTION H S4.2
SCALE: 3/4"=1'-0"

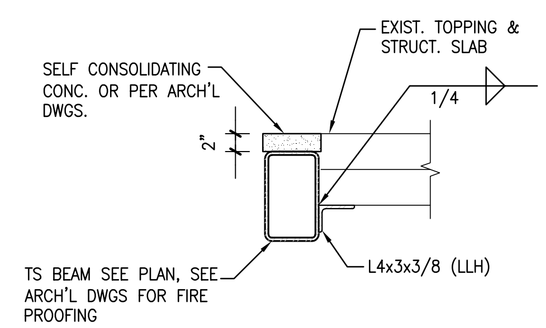

SECTION J S4.2
SCALE: 1"=1'-0"

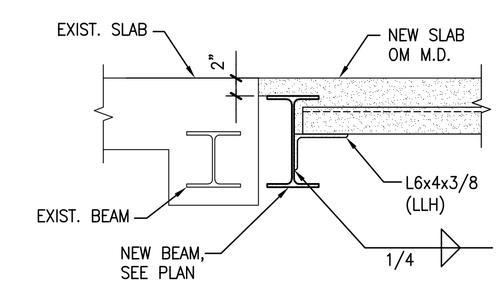

SECTION K S4.2
SCALE: 1"=1'-0"

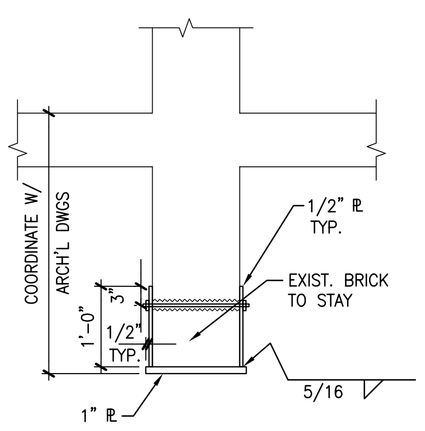

SECTION L S4.2
SCALE: 3/4"=1'-0"

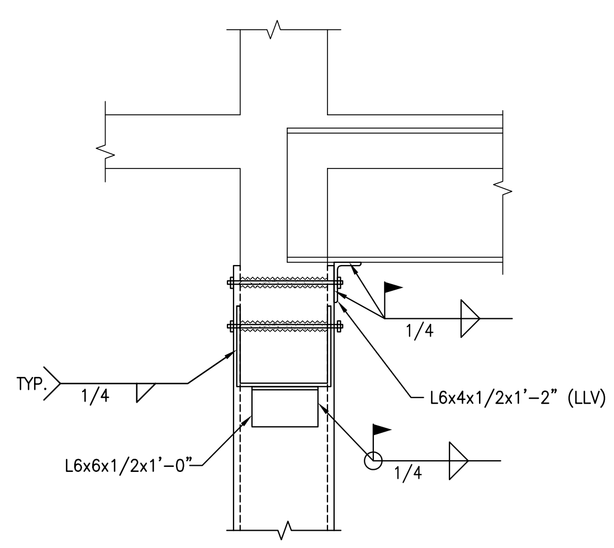

SECTION M S4.2
SCALE: 3/4"=1'-0"

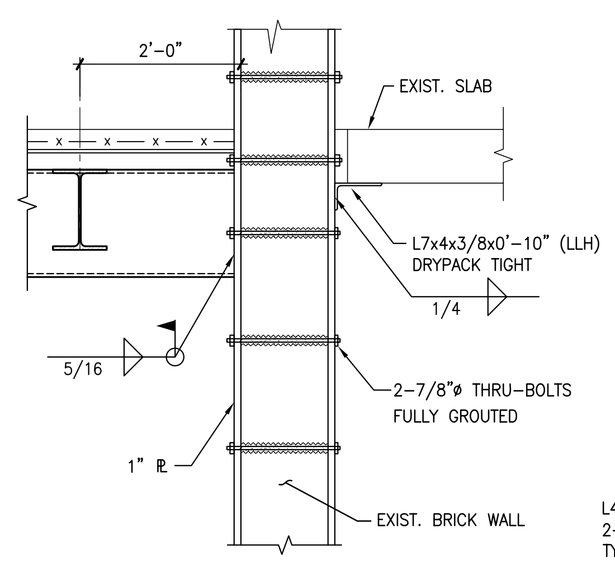

SECTION N S4.2
SCALE: 3/4"=1'-0"

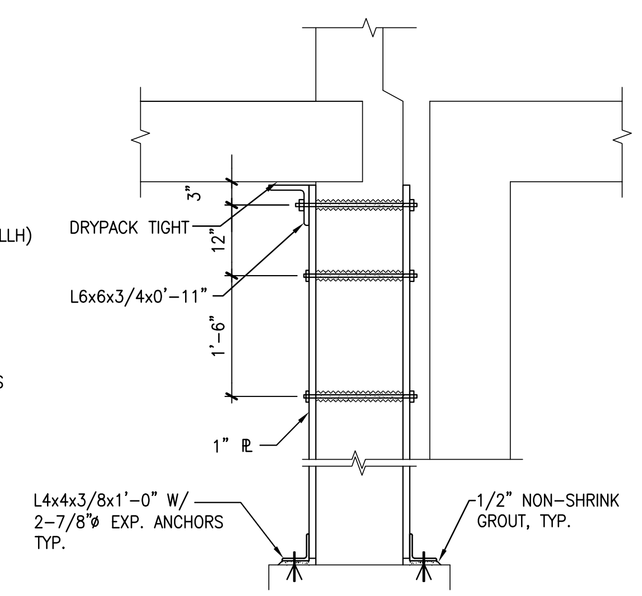

SECTION P S4.2
SCALE: 3/4"=1'-0"

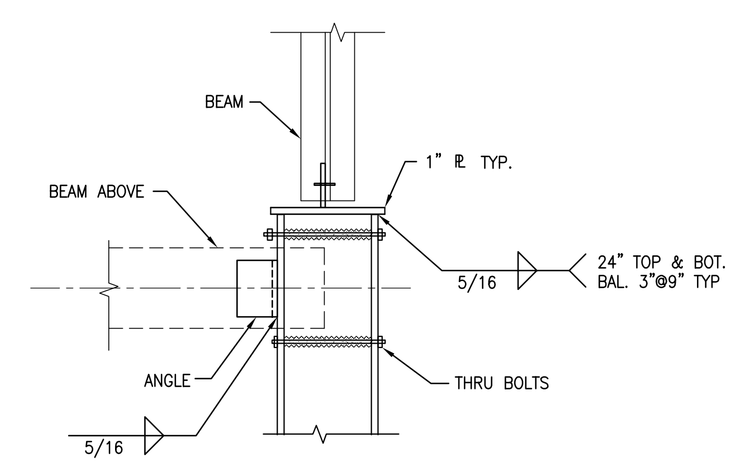

SECTION Q S4.2
SCALE: 3/4"=1'-0"

NOT FOR CONSTRUCTION

GEORGETOWN LIBRARY

3260 R Street,NW
WASHINGTON, DC

Client
DISTRICT OF COLUMBIA PUBLIC LIBRARY
901 G Street, NW
Washington, D.C. 20001

Architect
MARTINEZ & JOHNSON | ARCHITECTURE
1238 Wisconsin Avenue, NW, Suite 302
Washington, D.C. 20007
202.333.4480

Library Architect
HOSHIDE WILLIAMS ARCHITECTS
206.325.6441

Landscape Architect
Lee + Papa and Associates
202.446.6666

Structural Engineer
RESTL DESIGNERS, INC.
301.258.0093

MEP Engineer
JOHN J. CHRISTIE & ASSOCIATES, P.C
202.364.4410

THESE DRAWINGS, SPECIFICATIONS, AND OTHER DOCUMENTS, (COLLECTIVELY, THE "DOCUMENTS") INCLUDING WITHOUT LIMITATION ELECTRONIC VERSIONS THEREOF AND THE IDEAS, DESIGNS, AND ARRANGEMENTS REPRESENTED THEREBY, ARE AND SHALL REMAIN THE PROPERTY OF MARTINEZ & JOHNSON ARCHITECTURE PC, AS DEFINED BY APPLICABLE CONTRACTUAL AGREEMENTS ("THE AGREEMENTS") AND AS PROTECTED BY THE COPYRIGHT STATUTES OF THE UNITED STATES. USE OF THE DOCUMENTS SHALL BE STRICTLY LIMITED TO THE PROJECT FOR WHICH THEY WERE PREPARED AND DEVELOPED ("THE PROJECT") PER THE TERMS OF THE AGREEMENTS. NO PART OF THE DOCUMENTS SHALL BE COPIED, DISCLOSED TO OTHERS, OR USED IN CONNECTION WITH ANY OTHER WORK OR PROJECT, OR BY ANY OTHER PERSONS FOR ANY PURPOSES, OTHER THAN THE COMPLETION OF THE PROJECT, WITHOUT THE SPECIFIC WRITTEN AUTHORIZATION OF MARTINEZ & JOHNSON ARCHITECTURE PC. THE DOWNLOADING, OPENING, OR VIEWING OF ELECTRONIC VERSIONS OF THE DOCUMENTS OR VISUAL CONTACT WITH ANY PRINTED FORM THEREOF SHALL CONSTITUTE CONCLUSIVE EVIDENCE OF ACCEPTANCE OF THESE RESTRICTIONS.

MJ/A Project No.7590

DATE:	DESCRIPTION:
12.19.08	PERMIT SET
01.26.09	PERMIT SET

SHEET TITLE:

SECTIONS AND DETAILS

S4.2

RESTL Designers Inc.- S:\GNLR\DRAWINGS\STRUCT\CURRENT\S4.2.dwg
[S4.2] 01/23/09 - 4:42pm BChang

© 2008 MJ/A

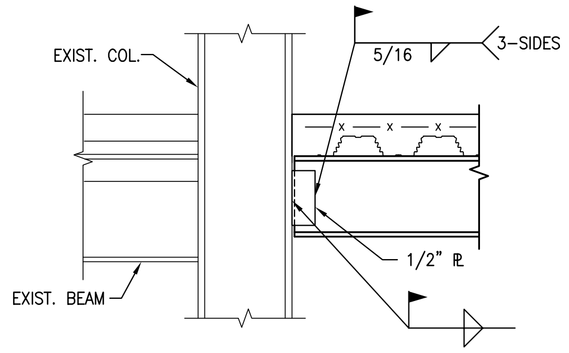

SECTION A S4.3
SCALE: 3/4"=1'-0"

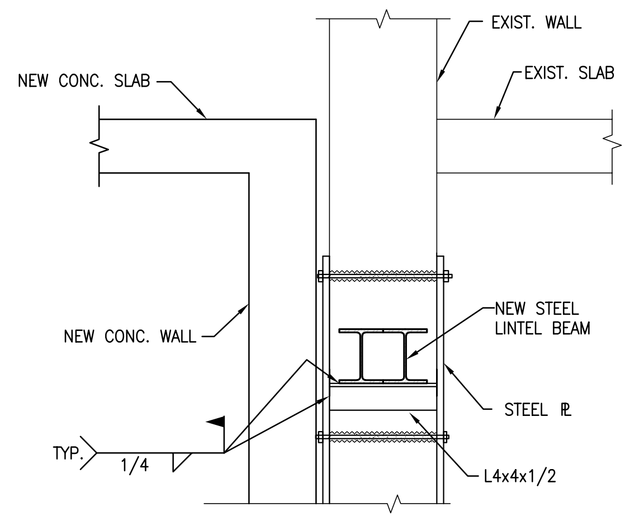

SECTION B S4.3
SCALE: 3/4"=1'-0"

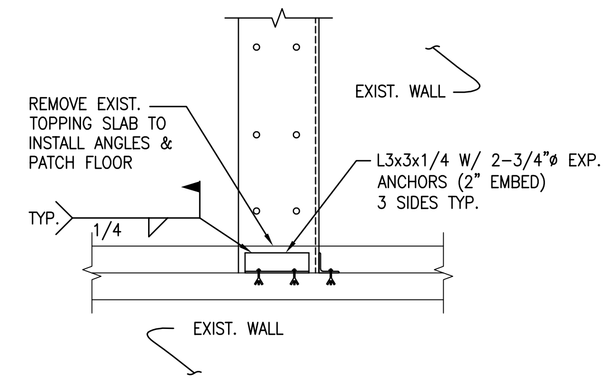

SECTION C S4.3
SCALE: 3/4"=1'-0"

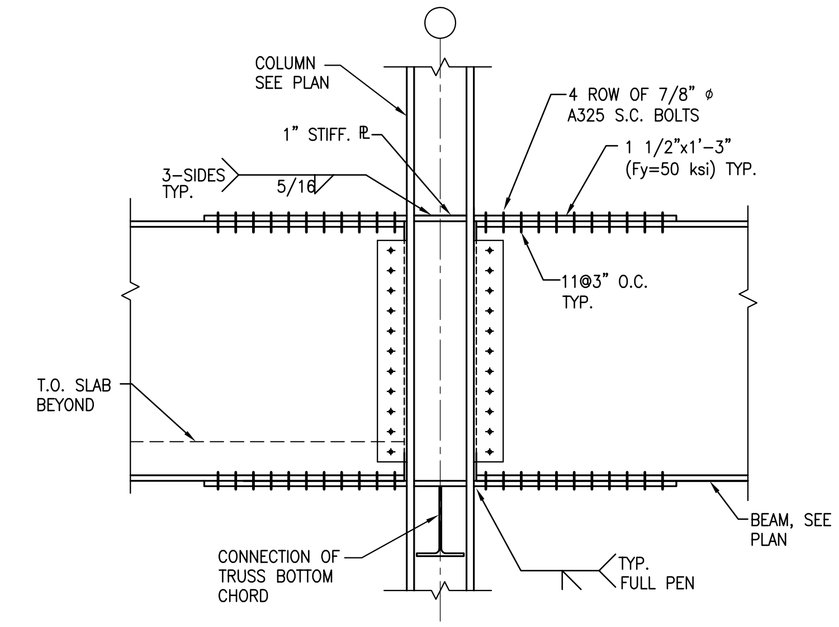

SECTION D S4.3
SCALE: 3/4"=1'-0"

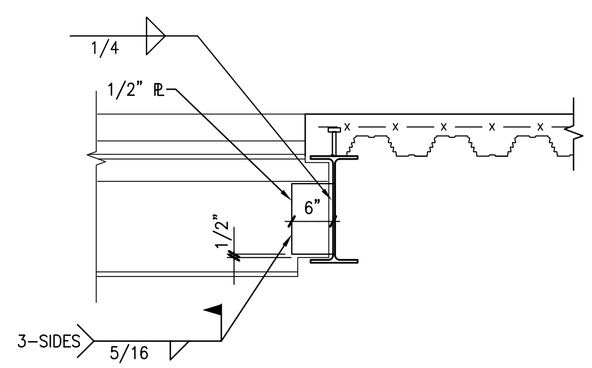

SECTION F S4.3
SCALE: 3/4"=1'-0"

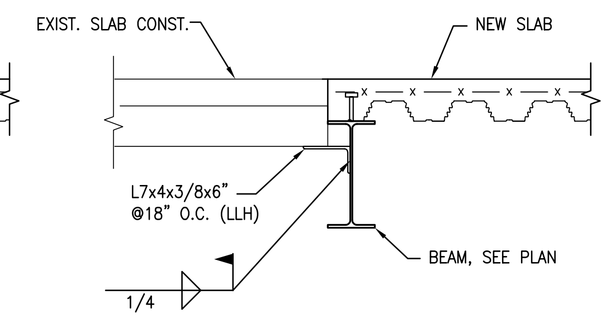

SECTION G S4.3
SCALE: 3/4"=1'-0"

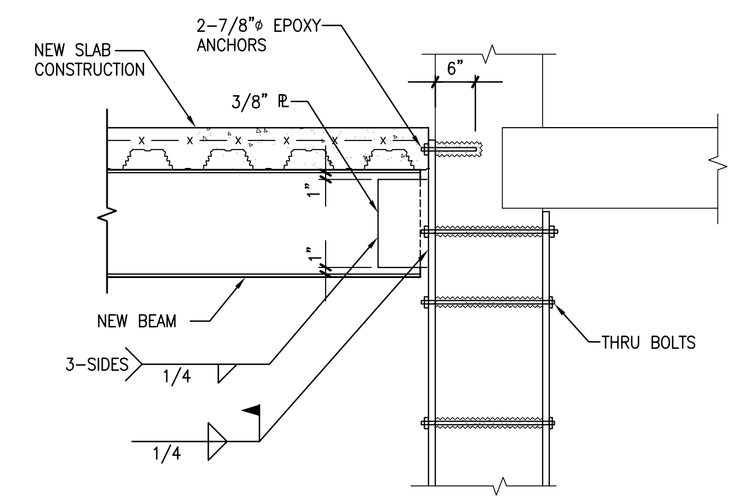

SECTION H S4.3
SCALE: 3/4"=1'-0"

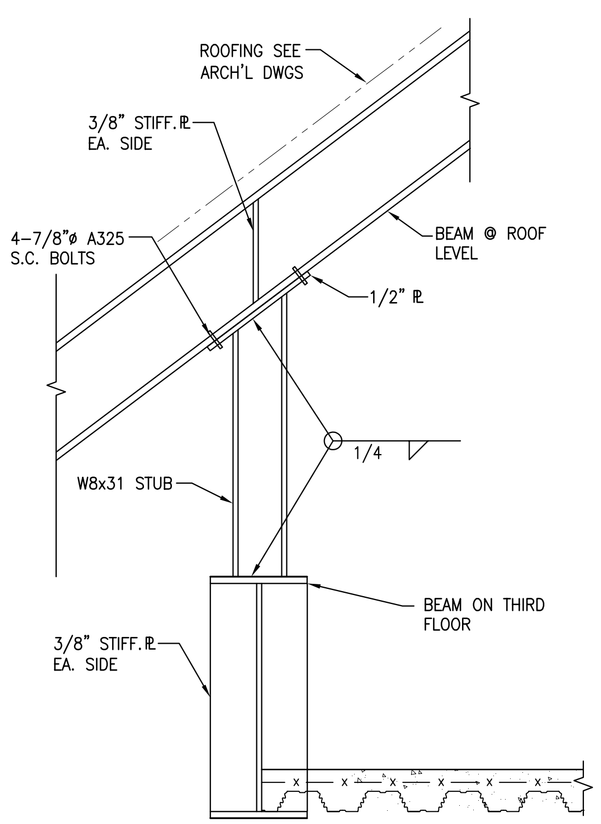

SECTION J S4.3
SCALE: 3/4"=1'-0"

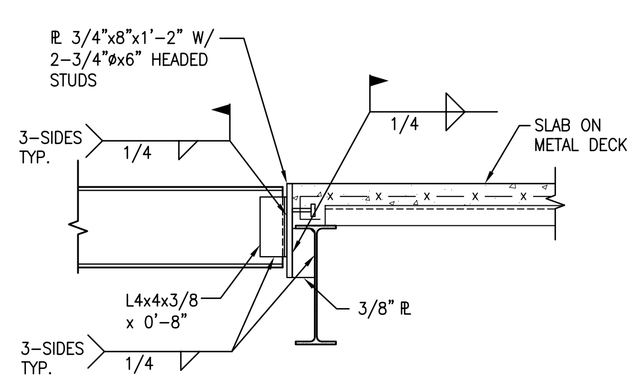

SECTION K S4.3
SCALE: 3/4"=1'-0"

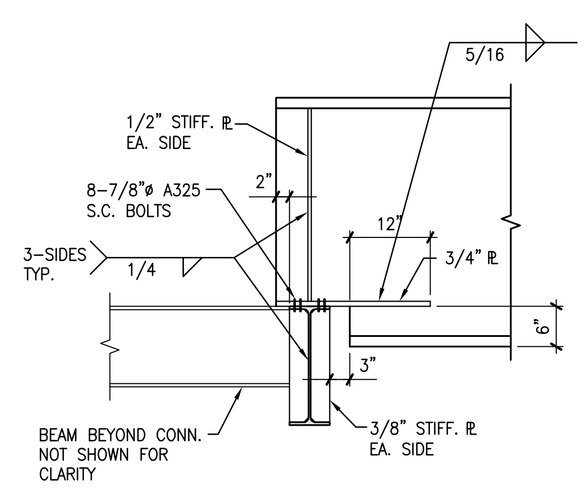

SECTION L S4.3
SCALE: 3/4"=1'-0"

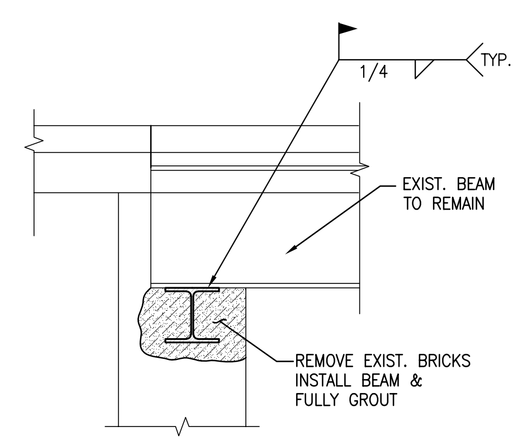

SECTION M S4.3
SCALE: 3/4"=1'-0"

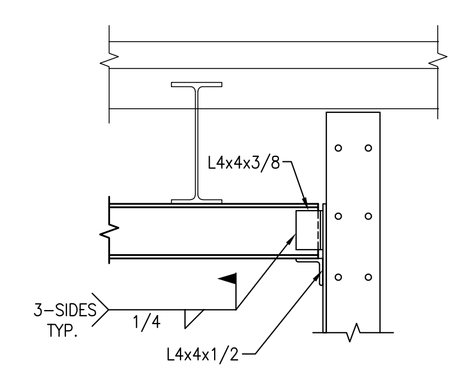

SECTION N S4.3
SCALE: 3/4"=1'-0"

NOT FOR CONSTRUCTION

GEORGETOWN LIBRARY

3260 R Street,NW
WASHINGTON, DC

Client
DISTRICT OF COLUMBIA PUBLIC LIBRARY
901 G Street, NW
Washington, D.C. 20001

Architect
MARTINEZ & JOHNSON | ARCHITECTURE
1238 Wisconsin Avenue, NW, Suite 302
Washington, D.C. 20007
202.333.4480

Library Architect
HOSHIDE WILLIAMS ARCHITECTS
206.325.6441

Landscape Architect
Lee + Papa and Associates
202.446.6666

Structural Engineer
RESTL DESIGNERS, INC.
301.258.0093

MEP Engineer
JOHN J. CHRISTIE & ASSOCIATES, P.C
202.364.4410

THESE DRAWINGS, SPECIFICATIONS, AND OTHER DOCUMENTS, (COLLECTIVELY, THE "DOCUMENTS") INCLUDING WITHOUT LIMITATION ELECTRONIC VERSIONS THEREOF AND THE IDEAS, DESIGNS, AND ARRANGEMENTS REPRESENTED THEREBY, ARE AND SHALL REMAIN THE PROPERTY OF MARTINEZ & JOHNSON ARCHITECTURE PC, AS DEFINED BY APPLICABLE CONTRACTUAL AGREEMENTS ("THE AGREEMENTS") AND AS PROTECTED BY THE COPYRIGHT STATUTES OF THE UNITED STATES. USE OF THE DOCUMENTS SHALL BE STRICTLY LIMITED TO THE PROJECT FOR WHICH THEY WERE PREPARED AND DEVELOPED ("THE PROJECT") PER THE TERMS OF THE AGREEMENTS. NO PART OF THE DOCUMENTS SHALL BE COPIED, DISCLOSED TO OTHERS, OR USED IN CONNECTION WITH ANY OTHER WORK OR PROJECT, OR BY ANY OTHER PERSONS FOR ANY PURPOSES, OTHER THAN THE COMPLETION OF THE PROJECT, WITHOUT THE SPECIFIC WRITTEN AUTHORIZATION OF MARTINEZ & JOHNSON ARCHITECTURE PC. THE DOWNLOADING, OPENING, OR VIEWING OF ELECTRONIC VERSIONS OF THE DOCUMENTS OR VISUAL CONTACT WITH ANY PRINTED FORM THEREOF SHALL CONSTITUTE CONCLUSIVE EVIDENCE OF ACCEPTANCE OF THESE RESTRICTIONS.

MJ/A Project No.7590

DATE:	DESCRIPTION:
12.19.08	PERMIT SET
01.26.09	PERMIT SET

SHEET TITLE:

SECTIONS AND DETAILS

S4.3

© 2008 MJ/A

RESTL Designers Inc.- S:\GNL\RDRAWINGS\STRUCT\CURRENT\S4.3.dwg
[S4.3] 01/23/09 - 4:42pm BChang

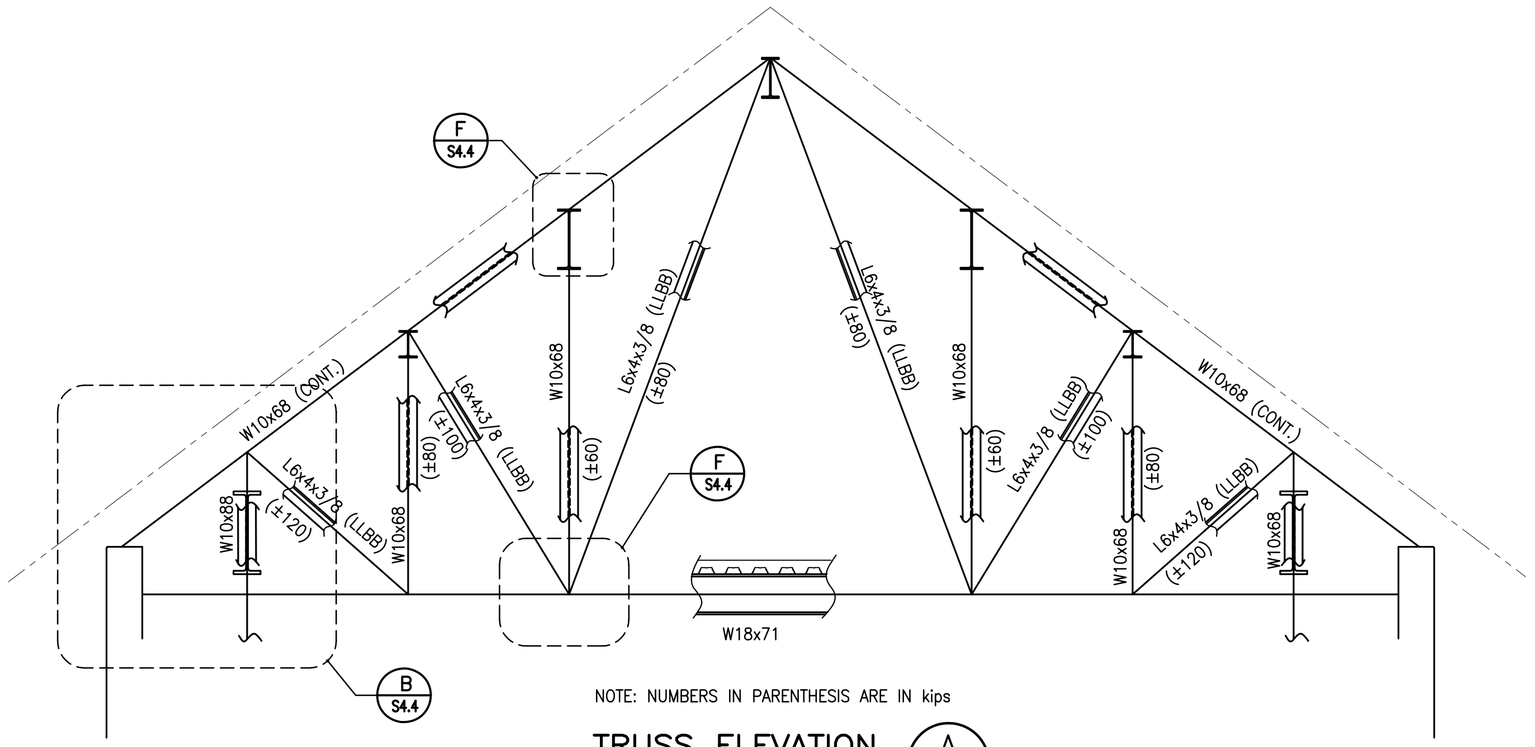

NOTE: NUMBERS IN PARENTHESIS ARE IN kips

TRUSS ELEVATION (A / S4.4)
SCALE: 1/4"=1'-0"

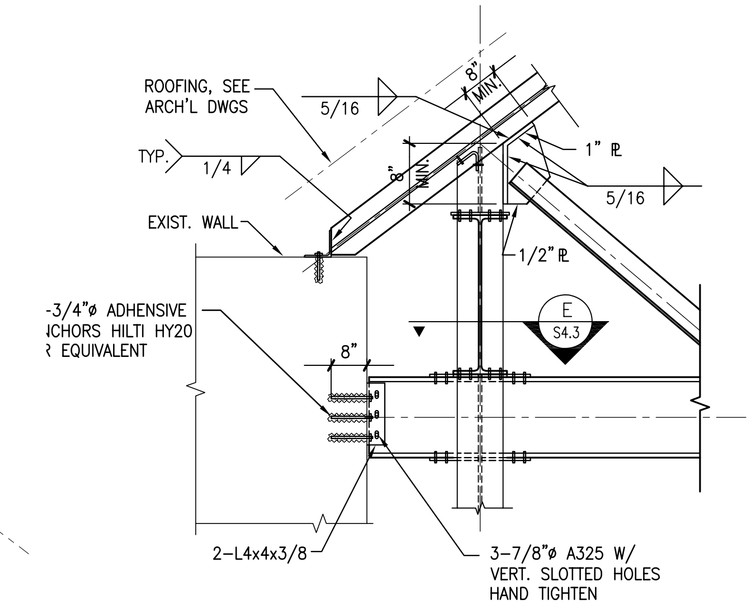

SECTION (B / S4.4)
SCALE: 1/2"=1'-0"

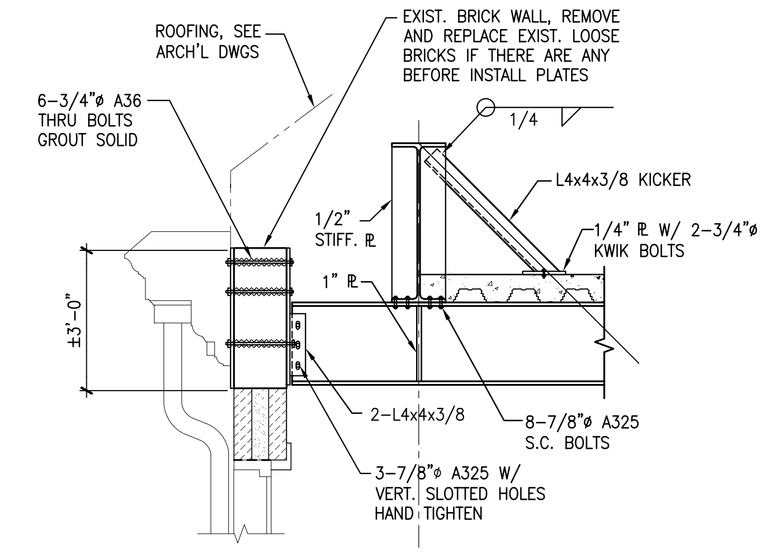

SECTION (C / S4.4)
SCALE: 1/2"=1'-0"

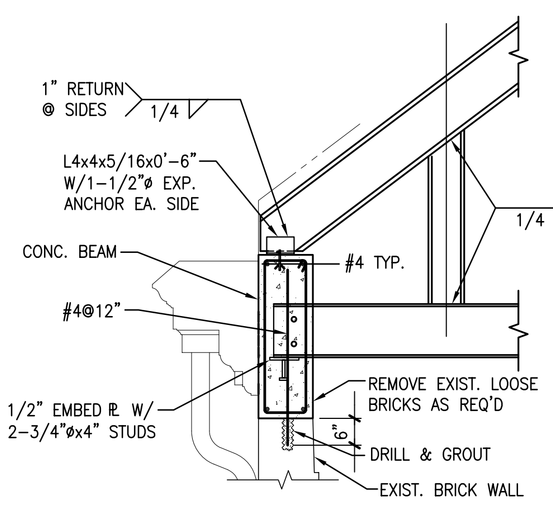

SECTION (D / S4.4)
SCALE: 1/2"=1'-0"

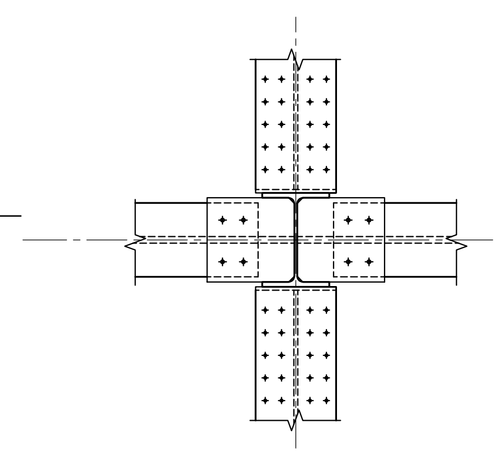

SECTION (E / S4.4)
SCALE: 3/4"=1'-0"

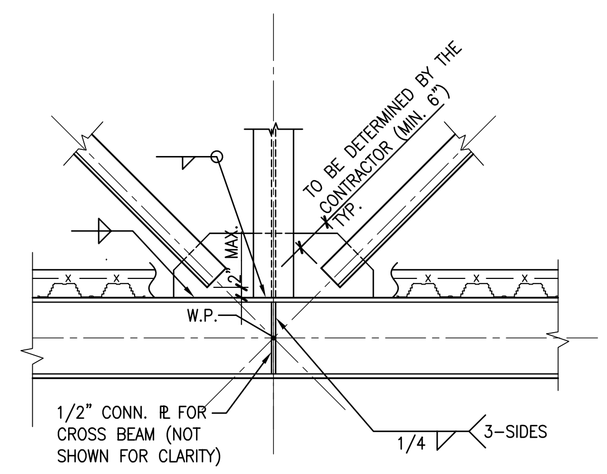

SECTION (F / S4.4)
SCALE: 1/2"=1'-0"

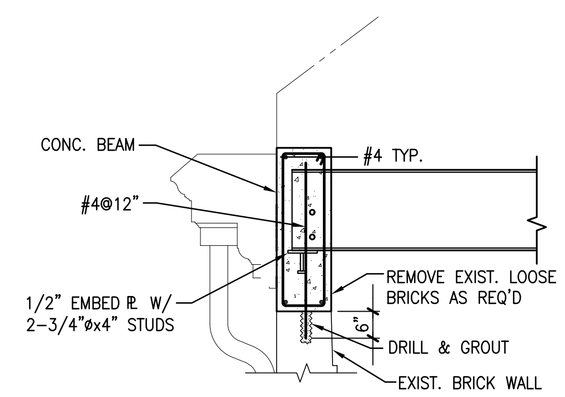

SECTION (G / S4.4)
SCALE: 1/2"=1'-0"

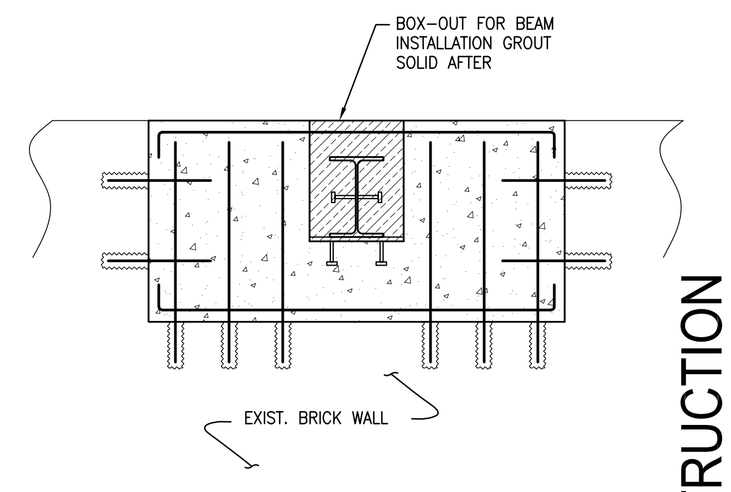

SECTION (H / S4.4)
SCALE: 3/4"=1'-0"

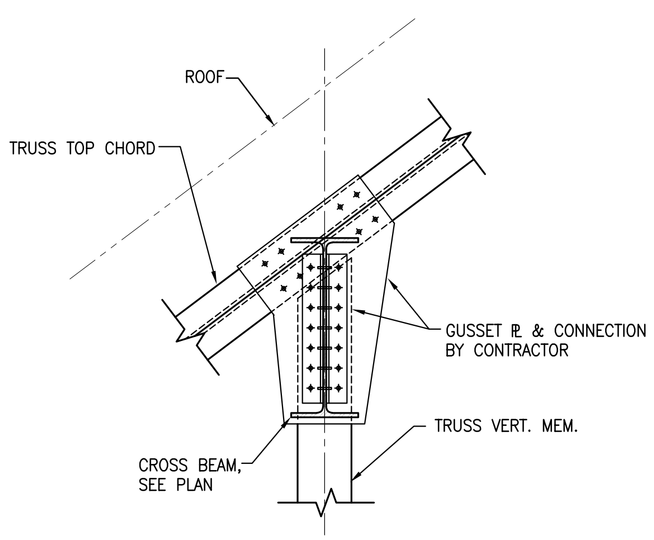

DETAIL (J / S4.4)
SCALE: 3/4"=1'-0"

NOT FOR CONSTRUCTION

GEORGETOWN LIBRARY

3260 R Street,NW
WASHINGTON, DC

Client
DISTRICT OF COLUMBIA PUBLIC LIBRARY
901 G Street, NW
Washington, D.C. 20001

Architect
MARTINEZ & JOHNSON | ARCHITECTURE
1238 Wisconsin Avenue, NW, Suite 302
Washington, D.C. 20007
202.333.4480

Library Architect
HOSHIDE WILLIAMS ARCHITECTS
206.325.6441

Landscape Architect
Lee + Papa and Associates
202.446.6666

Structural Engineer
RESTL DESIGNERS, INC.
301.258.0093

MEP Engineer
JOHN J. CHRISTIE & ASSOCIATES, P.C
202.364.4410

THESE DRAWINGS, SPECIFICATIONS, AND OTHER DOCUMENTS, (COLLECTIVELY, THE "DOCUMENTS") INCLUDING WITHOUT LIMITATION ELECTRONIC VERSIONS THEREOF AND THE IDEAS, DESIGNS, AND ARRANGEMENTS REPRESENTED THEREBY, ARE AND SHALL REMAIN THE PROPERTY OF MARTINEZ & JOHNSON ARCHITECTURE PC, AS DEFINED BY APPLICABLE CONTRACTUAL AGREEMENTS ("THE AGREEMENTS") AND AS PROTECTED BY THE COPYRIGHT STATUTES OF THE UNITED STATES. USE OF THE DOCUMENTS SHALL BE STRICTLY LIMITED TO THE PROJECT FOR WHICH THEY WERE PREPARED AND DEVELOPED ("THE PROJECT") PER THE TERMS OF THE AGREEMENTS. NO PART OF THE DOCUMENTS SHALL BE COPIED, DISCLOSED TO OTHERS, OR USED IN CONNECTION WITH ANY OTHER WORK OR PROJECT, OR BY ANY OTHER PERSONS FOR ANY PURPOSES, OTHER THAN THE COMPLETION OF THE PROJECT, WITHOUT THE SPECIFIC WRITTEN AUTHORIZATION OF MARTINEZ & JOHNSON ARCHITECTURE PC. THE DOWNLOADING, OPENING, OR VIEWING OF ELECTRONIC VERSIONS OF THE DOCUMENTS OR VISUAL CONTACT WITH ANY PRINTED FORM THEREOF SHALL CONSTITUTE CONCLUSIVE EVIDENCE OF ACCEPTANCE OF THESE RESTRICTIONS.

MJ/A Project No.7590

DATE:	DESCRIPTION:
12.19.08	PERMIT SET
01.26.09	PERMIT SET

SHEET TITLE:
SECTIONS AND DETAILS

S4.4

RESTL Designers Inc.- S:\GNLR\DRAWINGS\STRUCT\CURRENT\S4.4.dwg
[S4.4] 01/23/09 - 4:43pm BChang

© 2008 MJ/A

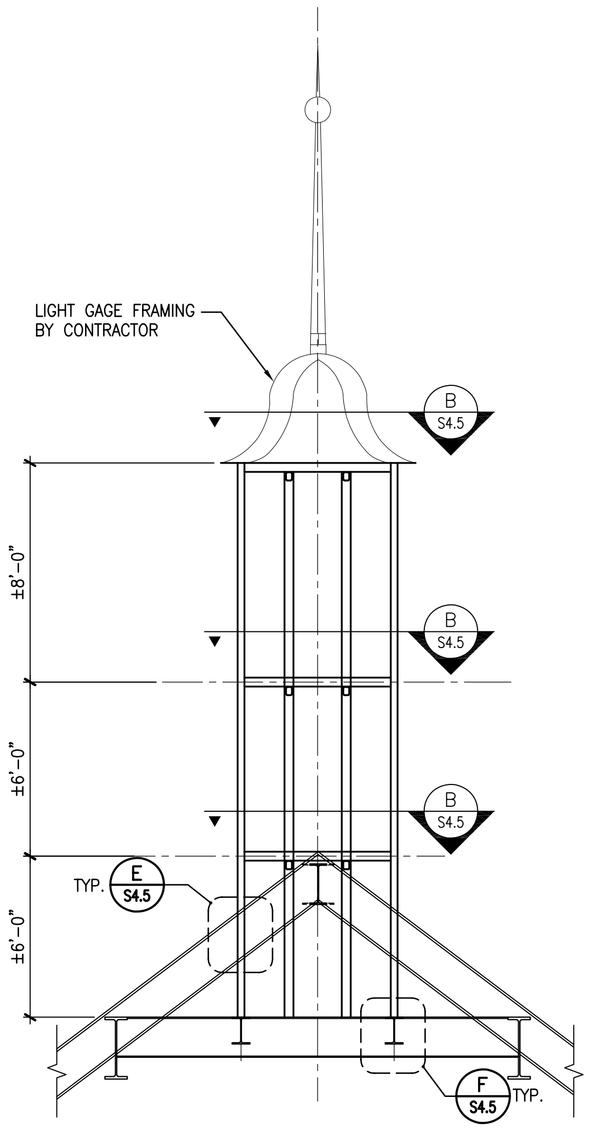

CUPOLA ELEVATION (A / S4.5)
SCALE: 1/4"=1'-0"

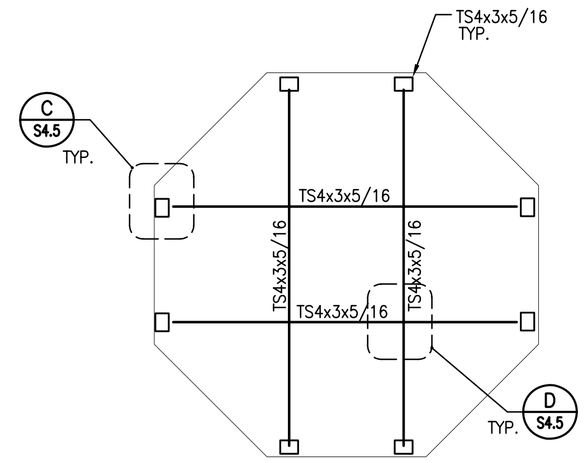

SECTION (B / S4.5)
SCALE: 1/2"=1'-0"

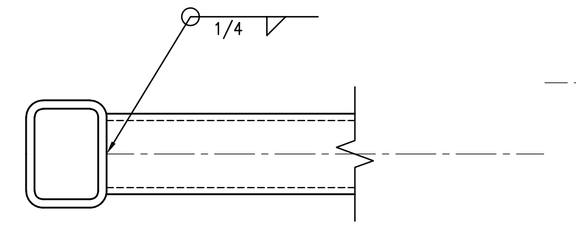

DETAIL (C / S4.5)
SCALE: 3"=1'-0"

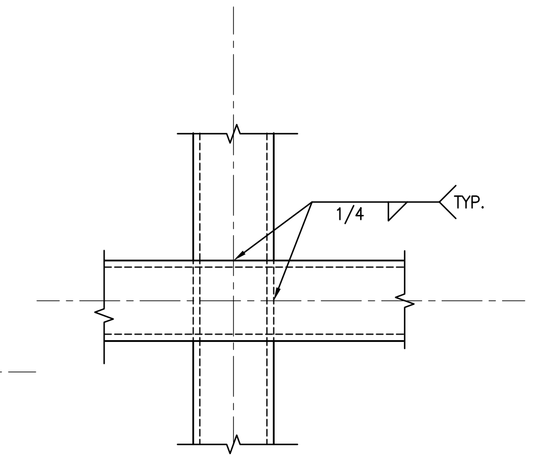

DETAIL (D / S4.5)
SCALE: 3"=1'-0"

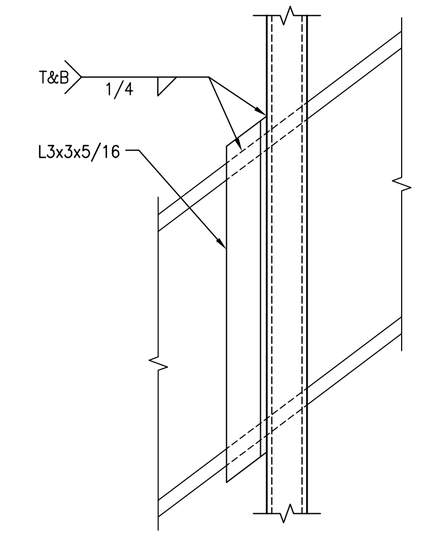

DETAIL (E / S4.5)
SCALE: 1 1/2"=1'-0"

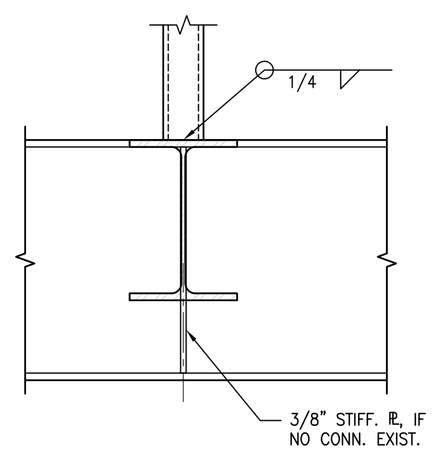

DETAIL (F / S4.5)
SCALE: 1 1/2"=1'-0"

NOT FOR CONSTRUCTION

GEORGETOWN LIBRARY

3260 R Street,NW
WASHINGTON, DC

Client
DISTRICT OF COLUMBIA PUBLIC LIBRARY
901 G Street, NW
Washington, D.C. 20001

Architect
MARTINEZ & JOHNSON | ARCHITECTURE
1238 Wisconsin Avenue, NW, Suite 302
Washington, D.C. 20007
202.333.4480

Library Architect
HOSHIDE WILLIAMS ARCHITECTS
206.325.6441

Landscape Architect
Lee + Papa and Associates
202.446.6666

Structural Engineer
RESTL DESIGNERS, INC.
301.258.0093

MEP Engineer
JOHN J. CHRISTIE & ASSOCIATES, P.C
202.364.4410

THESE DRAWINGS, SPECIFICATIONS, AND OTHER DOCUMENTS, (COLLECTIVELY, THE "DOCUMENTS") INCLUDING WITHOUT LIMITATION ELECTRONIC VERSIONS THEREOF AND THE IDEAS, DESIGNS, AND ARRANGEMENTS REPRESENTED THEREBY, ARE AND SHALL REMAIN THE PROPERTY OF MARTINEZ & JOHNSON ARCHITECTURE PC, AS DEFINED BY APPLICABLE CONTRACTUAL AGREEMENTS ("THE AGREEMENTS") AND AS PROTECTED BY THE COPYRIGHT STATUTES OF THE UNITED STATES. USE OF THE DOCUMENTS SHALL BE STRICTLY LIMITED TO THE PROJECT FOR WHICH THEY WERE PREPARED AND DEVELOPED ("THE PROJECT") PER THE TERMS OF THE AGREEMENTS. NO PART OF THE DOCUMENTS SHALL BE COPIED, DISCLOSED TO OTHERS, OR USED IN CONNECTION WITH ANY OTHER WORK OR PROJECT, OR BY ANY OTHER PERSONS FOR ANY PURPOSES, OTHER THAN THE COMPLETION OF THE PROJECT, WITHOUT THE SPECIFIC WRITTEN AUTHORIZATION OF MARTINEZ & JOHNSON ARCHITECTURE PC. THE DOWNLOADING, OPENING, OR VIEWING OF ELECTRONIC VERSIONS OF THE DOCUMENTS OR VISUAL CONTACT WITH ANY PRINTED FORM THEREOF SHALL CONSTITUTE CONCLUSIVE EVIDENCE OF ACCEPTANCE OF THESE RESTRICTIONS.

MJ/A Project No.7590

DATE:	DESCRIPTION:
12.19.08	PERMIT SET
01.26.09	PERMIT SET

SHEET TITLE:

SECTIONS AND DETAILS

S4.5

© 2008 MJ/A

RESTL Designers Inc.- S:\GNLR\DRAWINGS\STRUCT\CURRENT\S4.5.dwg
[S4.5] 01/23/09 - 4:38pm BChang