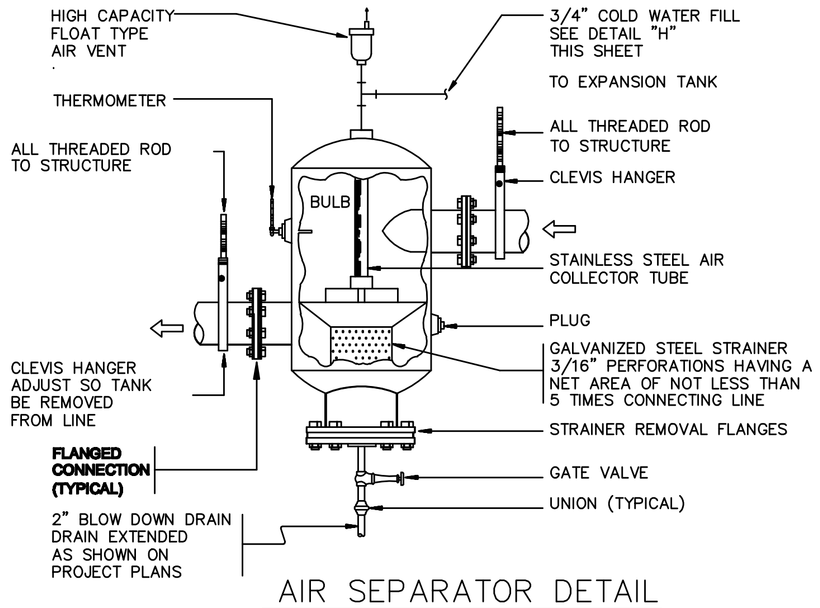

AIR SEPARATOR DETAIL

NOT TO SCALE

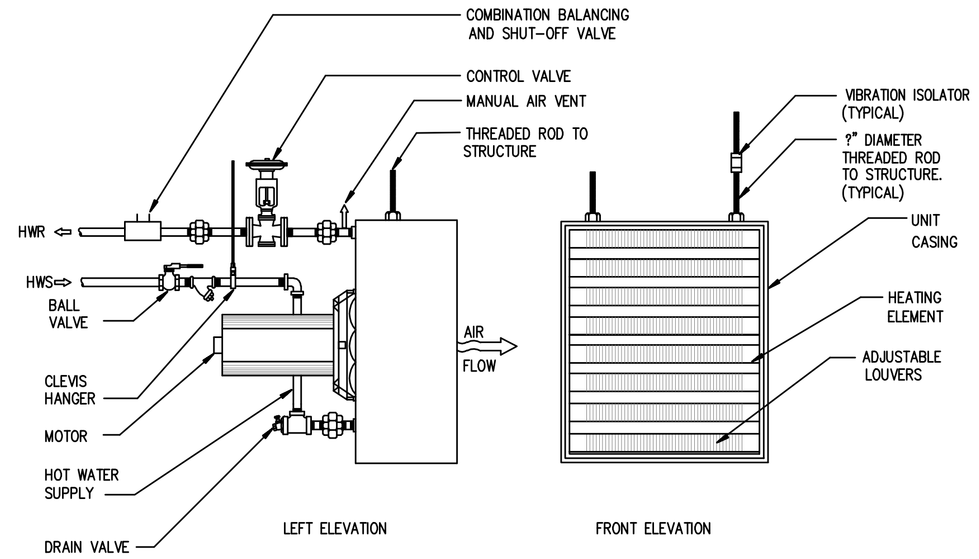

HORIZONTAL HOT WATER – UNIT HEATER CONNECTION

NO SCALE

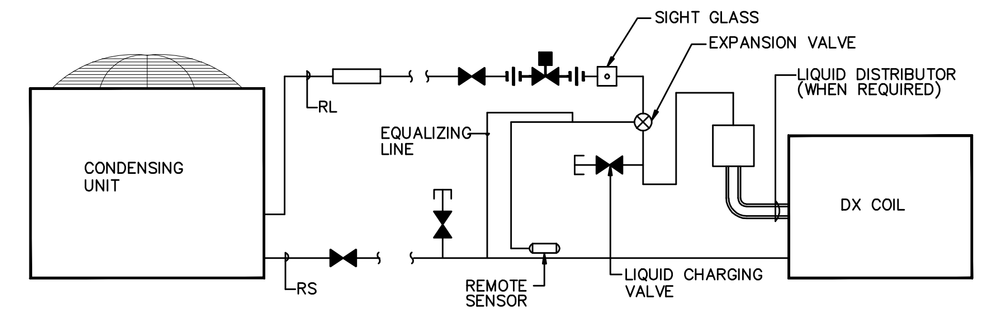

NOTE:
1. SIZE PIPES AS PER MANUFACTURER RECOMMENDATION.
2. RS & RL PIPING SHOWN ONLY FOR ONE CIRCUIT (TYP. OF 2)

OUTDOOR AIR COOLED CONDENSING UNIT PIPING DETAIL

NOT TO SCALE

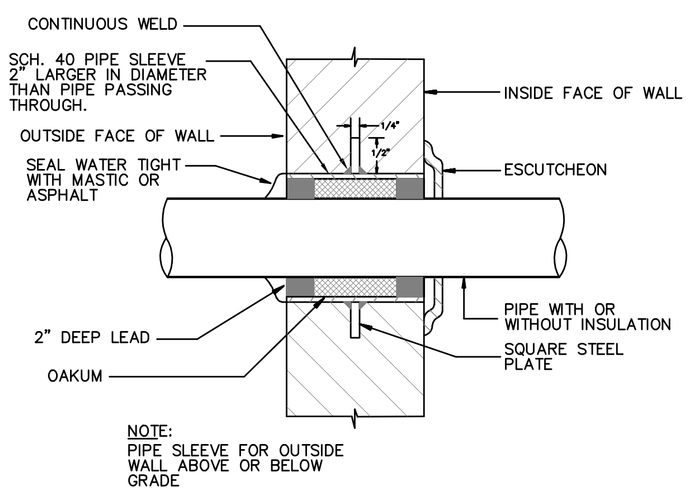

NOTE:
PIPE SLEEVE FOR OUTSIDE WALL ABOVE OR BELOW GRADE

PIPE SLEEVE DETAIL

NO SCALE

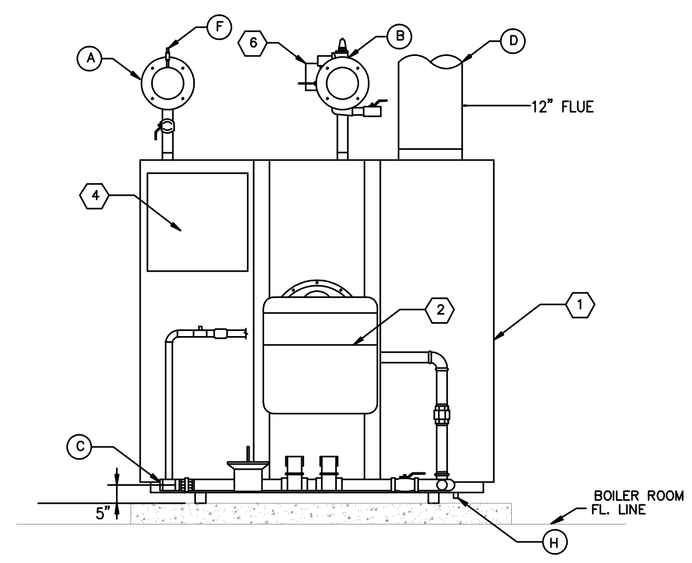

1. BOILER HOUSING ASSEMBLY
2. BURNER ASSEMBLY
3. CONDENSATE DRAIN ASSEMBLY
4. CONTROL PANEL ASSEMBLY
5. LOW WATER CUT OFF
6. TEMPERATURE HIGH LIMIT
7. TEMPERATURE SENSOR
8. FLOW SWITCH (OPTION)

A. WATER INLET
B. WATER OUTLET
C. GAS INLET
D. EXHAUST CONNECTION
E. PURGING VALVE
F. AIR CONNECTION VALVE BRASS
G. PRESSURE RELIEF VALVE BRASS
H. CONDENSATE CONNECTION

CONDENSING GAS FIRED HOT WATER BOILER DETAIL

NOT TO SCALE

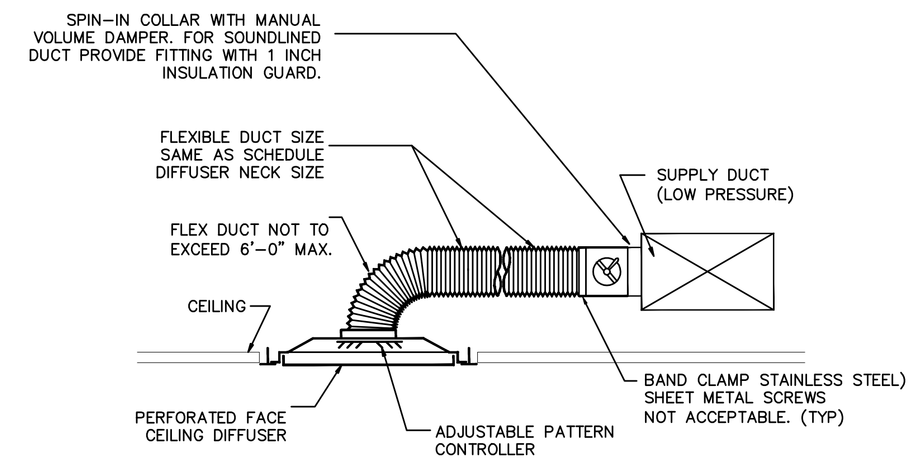

TYPICAL CEILING DIFFUSER INSTALLATION DETAIL

NOT TO SCALE

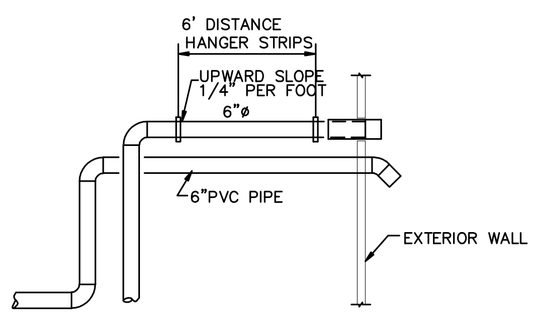

BOILER DETAIL DIRECT VENT HORIZONTAL

NO SCALE

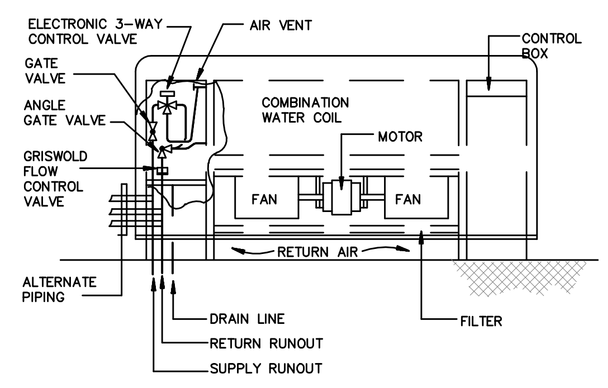

FAN COIL INSTALLATION DETAIL

NOT TO SCALE MDE037

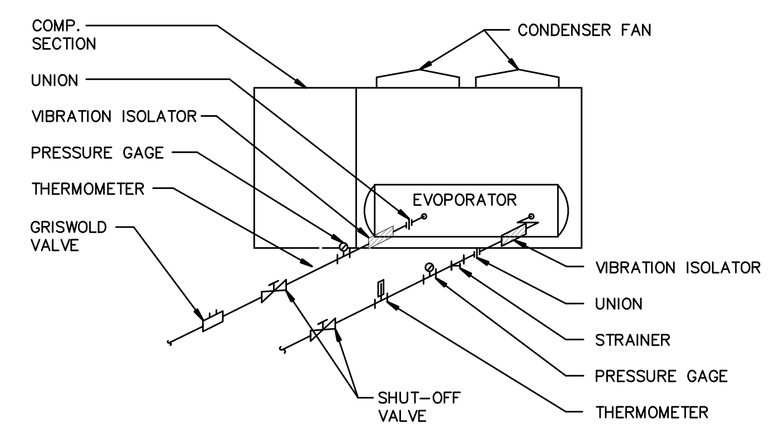

AIR COOLER CHILLER PIPING DETAIL

NOT TO SCALE MDE029

N

GEORGETOWN LIBRARY

3260 R Street,NW
WASHINGTON, DC

Client
DISTRICT OF COLUMBIA PUBLIC LIBRARY
901 G Street, NW
Washington, DC 20001
202.442.6870

Construction Manager
SMOOT CONSTRUCTION COMPANY
5335 Wisconsin Avenue, NW
Suite 940
Washington, DC 20007
202.243.6688

Architect
MARTINEZ + JOHNSON ARCHITECTURE
1412 Eye Street, NW
Washington, DC 20005
202.333.4480

Structural Engineer
RESTL DESIGNERS
202.452.1103

MEP Engineer
JOHN J. CHRISTIE & ASSOCIATES
301.608.0005

Associate Architect
HOSHIDE WILLIAMS ARCHITECTS
206.325.6441

Civil Engineer
AMT
202.289.4545

Landscape Architect
LEE + PAPA AND ASSOCIATES
202.466.6666

THESE DRAWINGS, SPECIFICATIONS, AND OTHER DOCUMENTS, (COLLECTIVELY, THE "DOCUMENTS") INCLUDING WITHOUT LIMITATION ELECTRONIC VERSIONS THEREOF AND THE IDEAS, DESIGNS, AND ARRANGEMENTS REPRESENTED THEREIN, ARE AND SHALL REMAIN THE PROPERTY OF MARTINEZ & JOHNSON ARCHITECTURE PC, AS DESIGNER BY AFFILIATES CONTRACTUAL AGREEMENTS ("THE AGREEMENTS") AND AS PROTECTED BY THE COPYRIGHT STATUTES OF THE UNITED STATES. USE OF THE DOCUMENTS SHALL BE STRICTLY LIMITED TO THE PROJECT FOR WHICH THEY WERE PREPARED AND DEVELOPED ("THE PROJECT") PER THE TERMS OF THE AGREEMENTS. NO PART OF THE DOCUMENTS SHALL BE COPIED, DISCLOSED TO OTHERS, OR USED IN CONNECTION WITH ANY OTHER WORK OR PROJECT, OR BY ANY OTHER PERSONS FOR ANY PURPOSES, OTHER THAN THE COMPLETION OF THE PROJECT, WITHOUT THE SPECIFIC WRITTEN AUTHORIZATION OF MARTINEZ & JOHNSON ARCHITECTURE PC. THE DOWNLOADING, OPENING, OR VIEWING OF ELECTRONIC VERSIONS OF THE DOCUMENTS OR VIEWS, CONTACT WITH ANY PRINTED FORM THEREOF SHALL CONSTITUTE ACCEPTANCE BY ACCEPTANCE OF THESE RESTRICTIONS.
M+J Project No.7590

CONTRACT:
DCCE-2007-C-0099

KEY PLAN

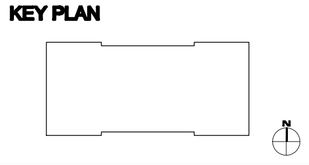

DATE:	DESCRIPTION:
06.18.08	SCHEMATIC DESIGN SET
09.01.08	DESIGN DEVELOPMENT
12.19.08	PERMIT SET
02.27.09	GMP SET
05.26.09	OGB PERMIT REVIEW
05.29.09	ADDENDUM 1

SHEET TITLE:

DETAILS MECHANICAL

M-3.02

© 2009 M+J